TOSHIBA BiCMOS Integrated Circuit Silicon Monolithic

TB9006FG

Dual Voltage Regulator with Watchdog Timer & Standby Function

TB9006FG is an IC Specially designed for microcomputer systems in automobile. It features high performance constant voltage power supply and various system reset functions.

The power supply part has two outputs, a main output and a sub output. It is possible to ON/OFF control for main output by EN1/2 terminal, and for both of main and sub by ST1/2 terminal. The consumption current is under 10uA When both main and sub is OFF. It is very little.

System reset includes a function of voltage monitoring and a watchdog timer which can self-diagnose the microcomputer system. Moreover as for protection function, it includes a mechanism of detection for the reverse connection, the current limiting, and over heat.

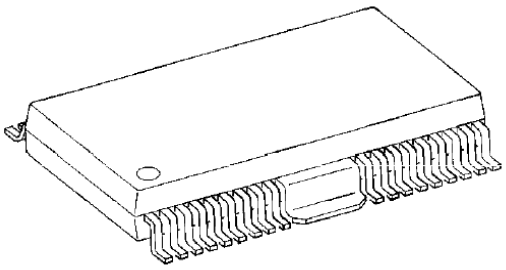

HSOP36-P-450-0.65

Mass：0.86g（typ）

Features

- Accurate output : 5V±0.15V
- Difference between main output and sub output : ±25mV
- Power Transistor for output : Main 250mA (max)
  Sub: 250mA (max)
- Low standby current : Main & Sub OFF : 10μA（max）
  Main OFF / Sub ON: 0.7mA (max)
  Main & Sub ON: 1.2mA（max）
- Multi Protection : reverse connection / overheat / current limiting
- Multi Reset Function : power-on reset / watchdog timer / Low-voltage reset
- Power SMD package : HSOP-36pin
- The product(s) is/are compatible with RoHS regulations (EU directive 2002 / 95 / EC) as indicated, if any, on the packaging label ("[[G]]/RoHS COMPATIBLE", "[[G]]/RoHS [[Chemical symbol(s) of controlled substance(s)]]", "RoHS COMPATIBLE" or "RoHS COMPATIBLE, [[Chemical symbol(s) of controlled substance(s)]]>MCV").

About solder ability, the following conditions were confirmed.

Solder ability

(1) Use of Sn-37Pb solder Bath
- solder bath temperature=230°C
- dipping time=5seconds
- the number of times=once
- use of R-type flux

(2) Use of Sn-3.0Ag-0.5Cu solder Bath
- solder bath temperature=245°C
- dipping time=5seconds
- the number of times=once
- use of R-type flux

Block Diagram

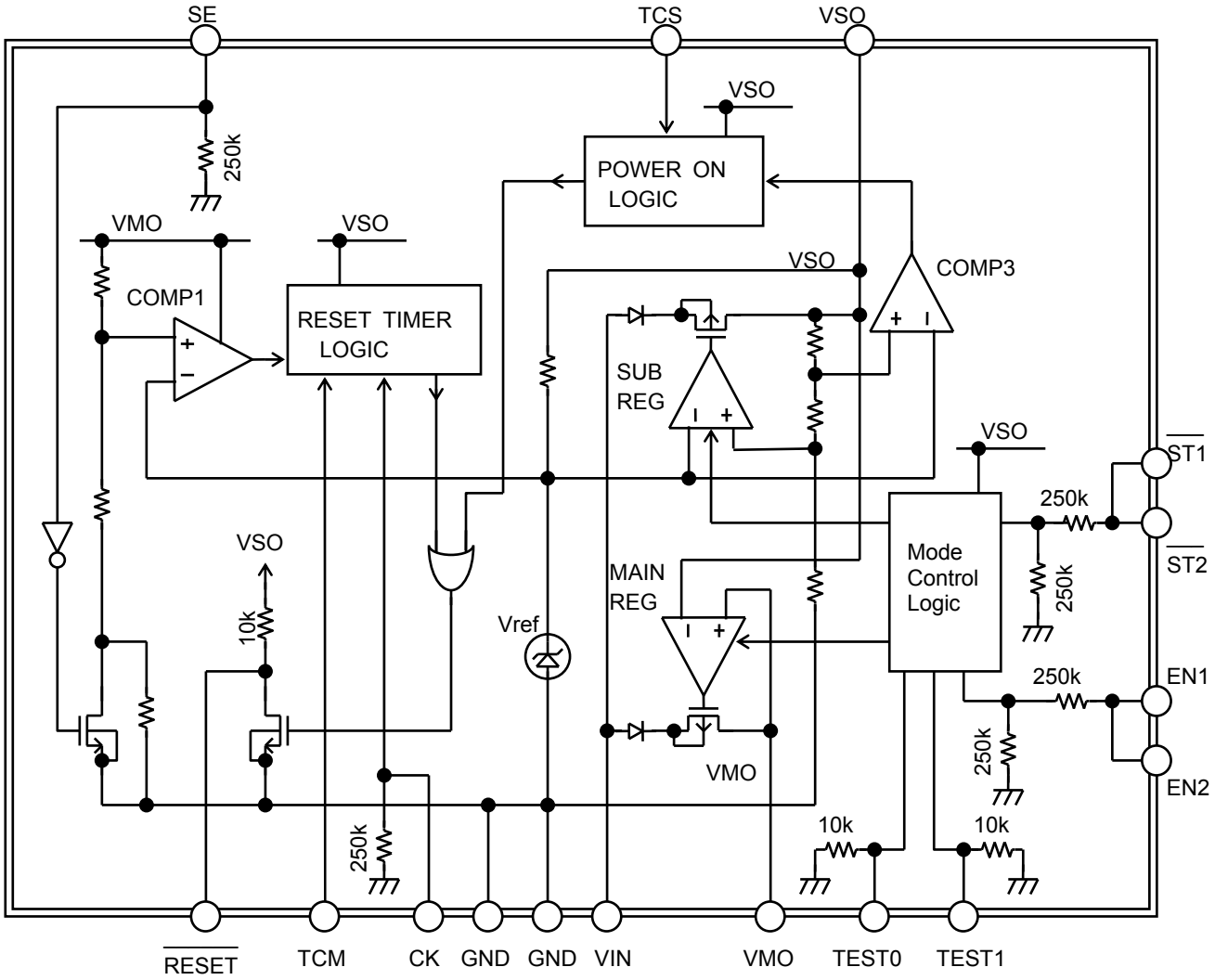

Note: Some functional blocks, circuits, or constants are omitted or simplified in the block diagram to clarify the descriptions of the relevant features.

Pin Layout

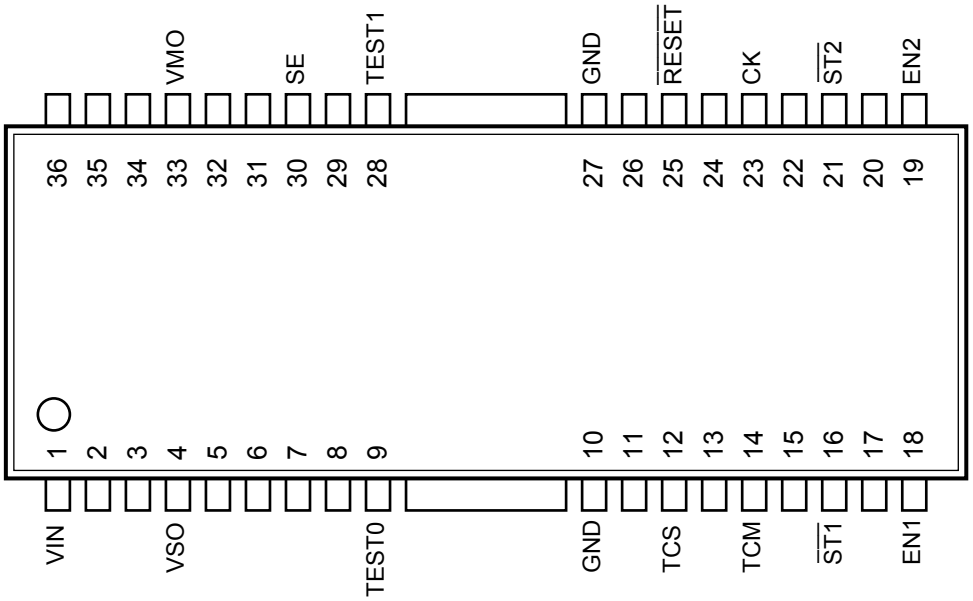

Pin Description

Pin No.	Symbol	Description
1	VIN	Power supply input pin. It's for both main input and sub input.
4	VSO	Sub output pin for 5V constant voltage. Maximum current capacity is 250mA.
9	TEST0	Test pin for evaluation IC. Using normally, connect this pin to GND. Built in pull-down resistor (10kohm) to GND inside IC.
10	GND	Grounded
12	TCS	Time setup pin for power-on reset timer when sub power supply is rising. Connect capacitor CT1 to CNG. Built in pull-up constant current (10uA).
14	TCM	Time setup pins for the reset and watchdog timer. Connect capacitor CT2to GND. Built in pull-up constant current (10uA).
16	$\overline{ST1}$	Power supply functions ON/OFF control pins for both of main and sub. $\overline{ST1}$="H": 5Voutput. $\overline{ST1}$="L": OFF(0V) $\overline{ST1}$="L": Standby mode. The maximum consumption current is10uA. Built in pull-down resistor (250kohm).
18	EN1	Enable pin with function ON/OFF control for main output. EN1="H": 5Voutput, EN1="L": OFF(0V) Built in pull-down resistor (250kohm).
19	EN2	Common pin connected with pin EN1.
21	$\overline{ST2}$	Common pin connected with pin $\overline{ST1}$
23	CK	Clock input pin for the watchdog timer. Built in pull-down resistor (250kohm) to GND.
25	$\overline{RESET}$	Reset output pin for watchdog timer. -Generates a reset signal that is determined by CT2 at the TCM pin. -If no clock is fed to the CK input, this pin generates a reset pulse intermittently. This is an N-NMOS drain output with a 10kohm pull-up resistor.
27	GND	Grounded
28	TEST1	Test pin for evaluation IC. Using normally, connect this pin to GND. Built in pull-down resistor (10kohm) to GND inside IC.
30	SE	Voltage detection pin for monitoring the power supply. SE="L": VTH2=4.40V SE="H": VTH2=4.20V Build in pull-down resistor (250kohm) to GND.
33	VMO	Main output pin for 5V constant voltage power supply. Maximum current capacity is 250mA. And more, this pin is power supply for timer too. It is possible to control ON/OFF of main power supply by pin EN1/EN2.
Refer to right column	NC	Not connected. (Electrically, this pin is completely open.) Pin No:2,3,5,6,7,8,11,13,15,17,20,22,24,26,29,31,32,34,35,36

Timing Chart (1)

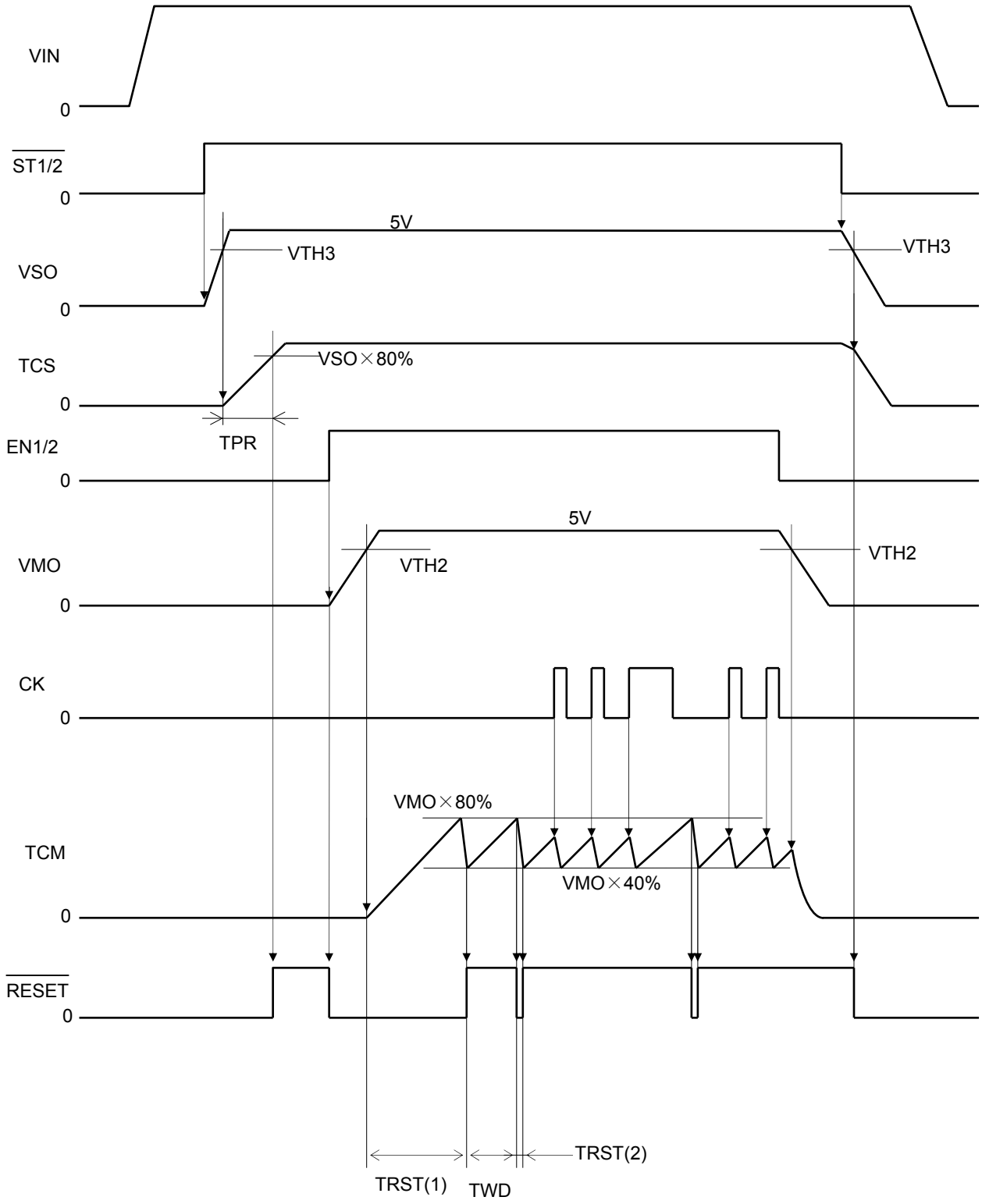

Note 1: Definitions of symbols used in this timing chart are provided in the Electrical Characteristics table.

Note 2: Timing charts may be simplified to clarify the descriptions of features and operations.

Timing Chart (2)

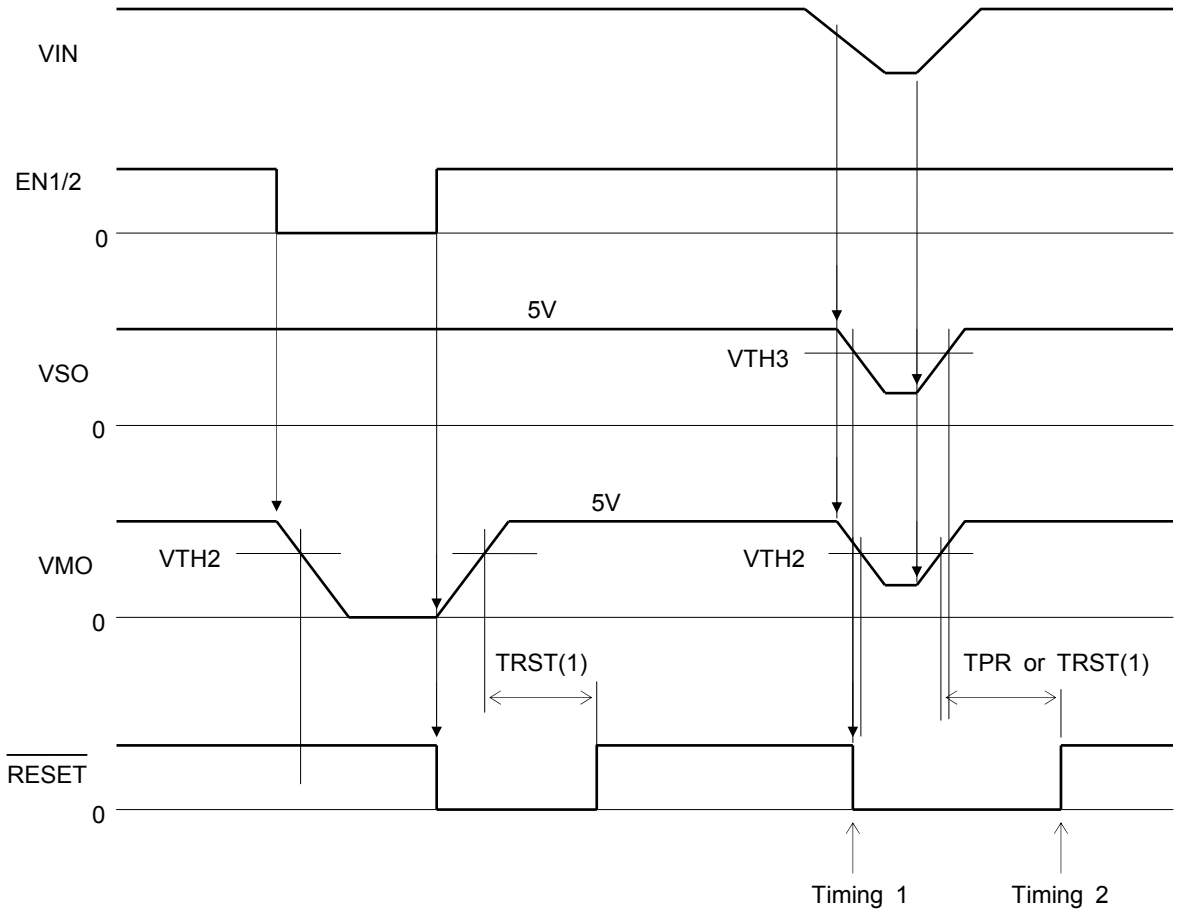

Note : Timing1 : Reset output reversal when either VTH2 or VTH3 are detected earlier.
Timing2 : Reset output reversal when both of TPR and TRST(1) are canceled.

Absolute Maximum Rating (Ta = 25°C)

Characteristics	Symbol	Pin	Rating	Unit
Input Voltage	VIN1	VIN	45 (200ms)(Note1)	V
	VIN2	VIN	40	
	VIN3	VIN	-16 (Note2)	
	VIN4	SE,TCM	-0.2～VMO	
	VIN5	CK,TCS	-0.2～VSO	
	VIN6	$\overline{ST1}$,$\overline{ST2}$,EN1,EN2	-5～VIN	
Output current	ILOAD-M	VMO	250	mA
	ILOAD-S	VSO	250	
	IOUT	$\overline{RESET}$	2	
Output voltage	VOUT	$\overline{RESET}$	VSO	V
Consumption current	PD	—	2.0	W
Operating temperature.	Topr	—	-40～105	℃
Storage temperature	Tstg	—	-55～150	℃

Note: The absolute maximum ratings of a semiconductor device are a set of specified parameter values that must not be exceeded during operation, even for an instant.
If any of these levels is exceeded during operation, the device's electrical characteristics may be irreparably altered and the reliability and lifetime of the device can no longer be guaranteed, possibly causing damage to any other equipment with which it is used. Applications using the device should be designed so that the absolute maximum ratings will never be exceeded in any operating conditions.
Ensuring that the parameter values remain within these specified ranges during device operation will help to ensure that the integrity of the device is not compromised.

Note1: Load Dump Surge（VMO/VSO ON）

Note2: REVERSE BATTERY

Electrical Characteristics

(Unless otherwise specified, VIN =7 to 18 V, ILOAD-M = 10 mA, ILOAD-S=10mA, Tc = –40 to 105°C)

Characteristics	Symbol	Pin	Test Condition	Min	Typ	Max	Unit
DC Characteristics							
Consumption current	Icc1	VIN	$\overline{ST1/2}$=5V,EN1/2=5V	—	0.9	1.2	mA
	Icc2	VIN	$\overline{ST1/2}$=5V,EN1/2=0V	—	0.45	0.7	
Standby current	Ist	VIN	$\overline{ST1/2}$=0V,Tc=25℃	—	—	8	μA
			$\overline{ST1/2}$=0V, Tc=-40 to 105℃	—	—	10	
Regulator							
Output Voltage	VSUB	VSO		4.85	5.0	5.15	V
V difference	VSO-VMO	VMO,VSO		-25	—	25	mV
Line regulation	VLINE	VMO,VSO	VIN=7 to 40V	—	0.1	0.5	%
Load regulation	VLOAD-M	VMO	ILOAD=1 to 100mA	—	0.3	1.0	%
	VLOAD-S	VSO	ILOAD=1 to 100mA	—	0.3	1.0	
Temperature coefficient		VSO		—	0.01	—	%/℃
Dropout Voltage	VDROP-M	VMO	ILOAD=250mA	—	2.2	—	V
	VDROP-S	VSO	ILOAD=250mA	—	2.2	—	
Current limiter detection	ILIMIT-M	VMO		—	500	—	mA
	ILIMIT-S	VSO		—	500	—	
Thermal shutdown	TSD			—	160	—	℃

Electrical Characteristics

Characteristics	Symbol	Pin	Test Condition	Min	Typ	Max	Unit
RESET TIMER DC characteristics							
Input current	IIH	SE	VIN(SE)=5V	—	20	40	μA
	IIL		VIN(SE)=0V	—	—	10	
	IIH	CK	VIN(CK)=5V	—	20	40	μA
	IIL		VIN(CK)=0V	—	—	10	
Input voltage	VIH	SE		0.8×VMO	—	—	V
	VIL			—	—	0.2×VMO	
	VIH	CK		0.8×VMO	—	—	V
	VIL			—	—	0.2×VMO	
Input current	IIH	$\overline{ST1}$,$\overline{ST2}$	VIN(ST)=14V	—	50	100	μA
	IIL		VIN(ST)=0V	—	—	10	
	IIH	EN1,EN2	VIN(EN)=14V	—	50	100	μA
	IIL		VIN(EN)=0V	—	—	10	
Input voltage	VIH	$\overline{ST1}$,$\overline{ST2}$		2.0	—	—	V
	VIL			—	—	0.5	
	VIH	EN1,EN2		2.0	—	—	V
	VIL			—	—	0.5	
Output voltage	VOL	$\overline{RESET}$	IOL=1mA	—	—	0.5	V
Input current	IIN	TCS		—	-10	—	μA
Threshold voltage	VTH	TCS		—	VSO×80%	—	V
Input current	IIN	TCM		—	-10	—	μA
Threshold voltage	VIH	TCM		—	VMO×80%	—	V
	VIL			—	VMO×40%	—	
Reset detection Voltage	VTH2-H	VMO	SE=GND	—	VMO×88%	—	V
	VTH2-L		SE=VREG	—	VMO×84%	—	
	VTH3	VSO		—	VSO×84%	—	
AC characteristics							
Power-on reset timer	TPR	$\overline{RESET}$		280×CT1	400×CT1	520×CT1	ms
Watchdog timer	TWD	$\overline{RESET}$		140×CT2	200×CT2	260×CT2	
Reset timer (1)	TRST(1)	$\overline{RESET}$		280×CT2	400×CT2	520×CT2	
Reset timer (2)	TRST(2)	$\overline{RESET}$		0.3×CT2	0.7×CT2	1.5×CT2	
Clock pulse width	TW	CK		3	—	—	μs

Note1: CT1 and CT2 are measured in units of uF.

Note 2: The specification values for power-on reset, watchdog timer and reset timer above are guaranteed only for the IC itself. Any practical application of the IC should take into account fluctuations in the CT1 and CT2 value.

Table of Truth Value

Input		Output	
$\overline{ST1}$,$\overline{ST2}$	EN1,EN2	VMO	VSO
H	H	5V	5V
H	L	0V（OFF）	5V
L	Don't Care	0V（OFF）	0V（OFF）

Example of Application Circuit

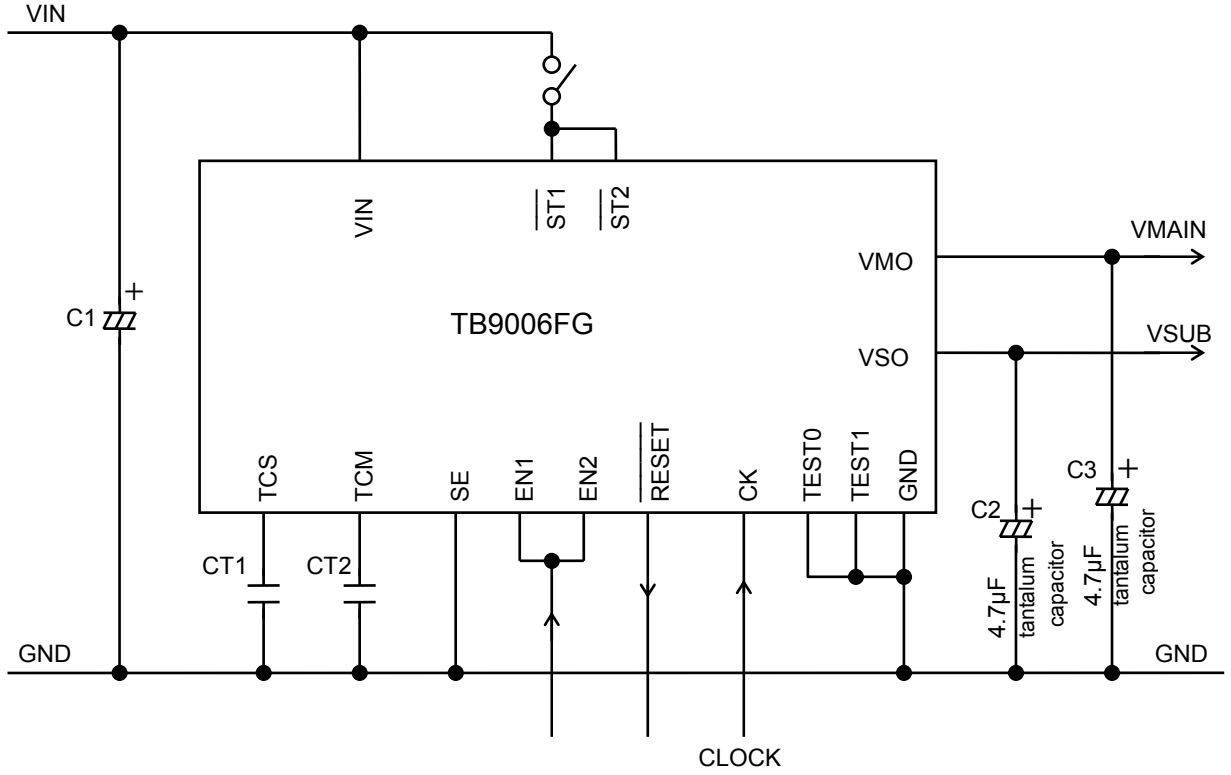

Note 1:Caution for Wiring
C1 and C2 are for absorbing disturbances, noise, etc. Connect each capacitor as close to the IC as possible.

Note 2:Ensure that the IC is mounted correctly. Failure to do so may result in the IC or target equipment being damaged.

Note 3:The application circuit shown above is not intended to guarantee mass production. A thorough evaluation is required when designing an application circuit for mass production.

Operating Conditions

Pad Name	Min	Max	Unit
CT1	0.01	10	μF
CT2	0.01	10	μF

Reference Characteristics

Protect Function

(1)Characteristics of current limiting

Standard Characteristics
VMO,VSO common

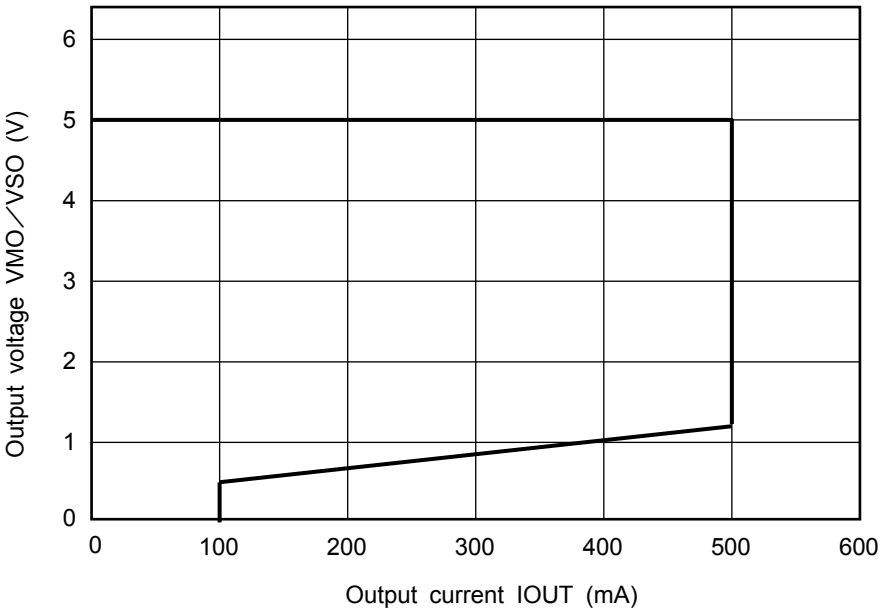

(3) Characteristics of Thermal Shat Down

Using VF temperature characteristics on a chip, it detects 160℃ (typ).

After detection, VSO output turned OFF. VMO output is down followed VSO.

RESTRICTIONS ON PRODUCTS USE

Be careful static electrical charge completely.

ESD Reference Data

・MM（EJAJ:R=0ohm / C=200pF）: ±250V OK
・HBM（MIL:R=1.5kohm / C=100pF）: ±1kV OK

Figure of dimension

HSOP36-P-450-0.65 unit : mm

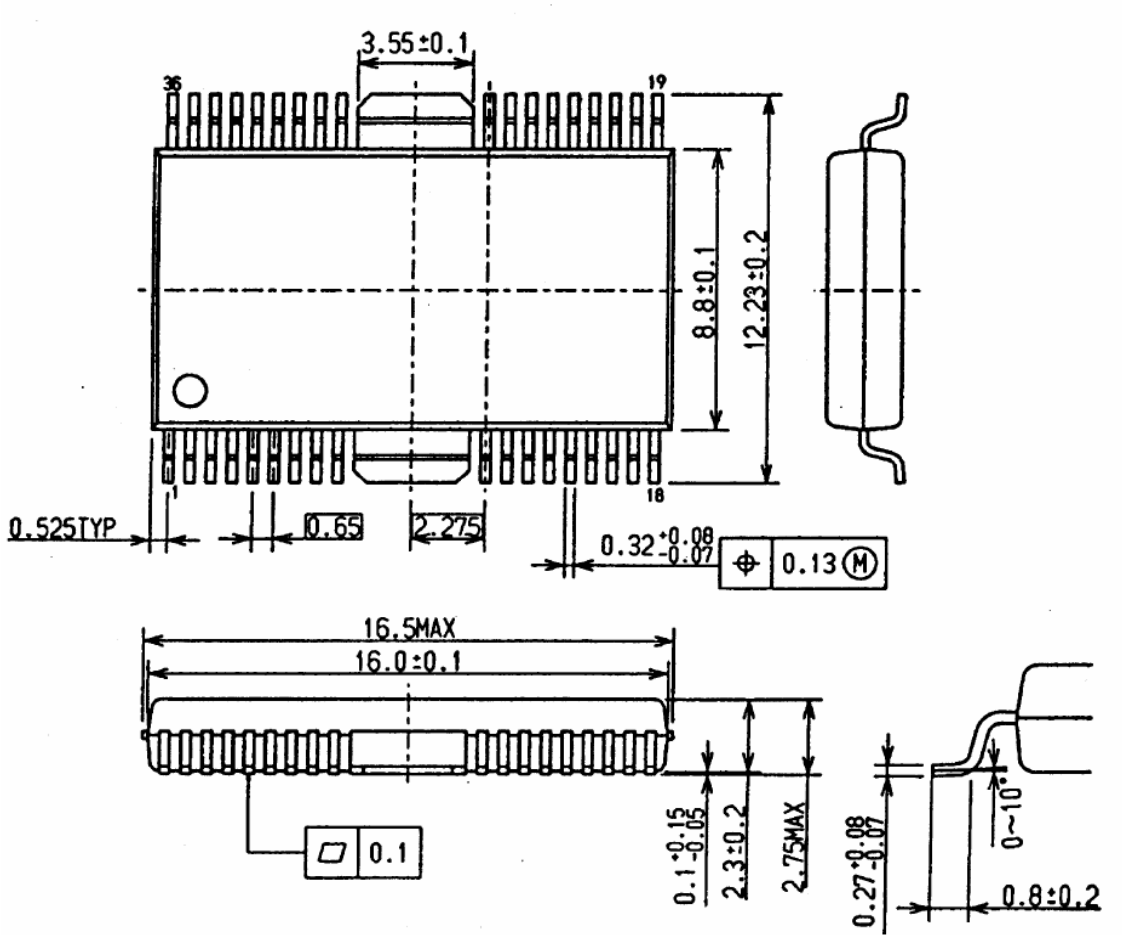

Mass: 0.86 g (typ)

RESTRICTIONS ON PRODUCT USE

- Toshiba Corporation, and its subsidiaries and affiliates (collectively “TOSHIBA”), reserve the right to make changes to the information in this document, and related hardware, software and systems (collectively “Product”) without notice.
- This document and any information herein may not be reproduced without prior written permission from TOSHIBA. Even with TOSHIBA’s written permission, reproduction is permissible only if reproduction is without alteration/omission.
- Though TOSHIBA works continually to improve Product’s quality and reliability, Product can malfunction or fail. Customers are responsible for complying with safety standards and for providing adequate designs and safeguards for their hardware, software and systems which minimize risk and avoid situations in which a malfunction or failure of Product could cause loss of human life, bodily injury or damage to property, including data loss or corruption. Before customers use the Product, create designs including the Product, or incorporate the Product into their own applications, customers must also refer to and comply with (a) the latest versions of all relevant TOSHIBA information, including without limitation, this document, the specifications, the data sheets and application notes for Product and the precautions and conditions set forth in the “TOSHIBA Semiconductor Reliability Handbook” and (b) the instructions for the application with which the Product will be used with or for. Customers are solely responsible for all aspects of their own product design or applications, including but not limited to (a) determining the appropriateness of the use of this Product in such design or applications; (b) evaluating and determining the applicability of any information contained in this document, or in charts, diagrams, programs, algorithms, sample application circuits, or any other referenced documents; and (c) validating all operating parameters for such designs and applications. **TOSHIBA ASSUMES NO LIABILITY FOR CUSTOMERS’ PRODUCT DESIGN OR APPLICATIONS.**
- Product is intended for use in general electronics applications (e.g., computers, personal equipment, office equipment, measuring equipment, industrial robots and home electronics appliances) or for specific applications as expressly stated in this document. Product is neither intended nor warranted for use in equipment or systems that require extraordinarily high levels of quality and/or reliability and/or a malfunction or failure of which may cause loss of human life, bodily injury, serious property damage or serious public impact (“Unintended Use”). Unintended Use includes, without limitation, equipment used in nuclear facilities, equipment used in the aerospace industry, medical equipment, equipment used for automobiles, trains, ships and other transportation, traffic signaling equipment, equipment used to control combustions or explosions, safety devices, elevators and escalators, devices related to electric power, and equipment used in finance-related fields. Do not use Product for Unintended Use unless specifically permitted in this document.
- Do not disassemble, analyze, reverse-engineer, alter, modify, translate or copy Product, whether in whole or in part.
- Product shall not be used for or incorporated into any products or systems whose manufacture, use, or sale is prohibited under any applicable laws or regulations.
- The information contained herein is presented only as guidance for Product use. No responsibility is assumed by TOSHIBA for any infringement of patents or any other intellectual property rights of third parties that may result from the use of Product. No license to any intellectual property right is granted by this document, whether express or implied, by estoppel or otherwise.
- **ABSENT A WRITTEN SIGNED AGREEMENT, EXCEPT AS PROVIDED IN THE RELEVANT TERMS AND CONDITIONS OF SALE FOR PRODUCT, AND TO THE MAXIMUM EXTENT ALLOWABLE BY LAW, TOSHIBA (1) ASSUMES NO LIABILITY WHATSOEVER, INCLUDING WITHOUT LIMITATION, INDIRECT, CONSEQUENTIAL, SPECIAL, OR INCIDENTAL DAMAGES OR LOSS, INCLUDING WITHOUT LIMITATION, LOSS OF PROFITS, LOSS OF OPPORTUNITIES, BUSINESS INTERRUPTION AND LOSS OF DATA, AND (2) DISCLAIMS ANY AND ALL EXPRESS OR IMPLIED WARRANTIES AND CONDITIONS RELATED TO SALE, USE OF PRODUCT, OR INFORMATION, INCLUDING WARRANTIES OR CONDITIONS OF MERCHANTABILITY, FITNESS FOR A PARTICULAR PURPOSE, ACCURACY OF INFORMATION, OR NONINFRINGEMENT.**
- Do not use or otherwise make available Product or related software or technology for any military purposes, including without limitation, for the design, development, use, stockpiling or manufacturing of nuclear, chemical, or biological weapons or missile technology products (mass destruction weapons). Product and related software and technology may be controlled under the Japanese Foreign Exchange and Foreign Trade Law and the U.S. Export Administration Regulations. Export and re-export of Product or related software or technology are strictly prohibited except in compliance with all applicable export laws and regulations.
- Please contact your TOSHIBA sales representative for details as to environmental matters such as the RoHS compatibility of Product. Please use Product in compliance with all applicable laws and regulations that regulate the inclusion or use of controlled substance s, including without limitation, the EU RoHS Directive. TOSHIBA assumes no liability for damages or losses occurring as a result of noncompliance with applicable laws and regulations.