Features

- Avalanche Rugged Technology
- Rugged Gate Oxide Technology
- High di/dt Capability
- Improved Gate Charge
- Wide Expanded Safe Operating Area

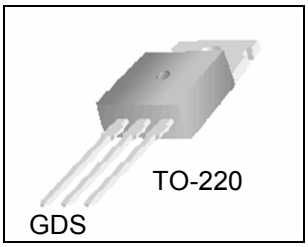

Application

- DC-DC Converters
- UPS & Monitors

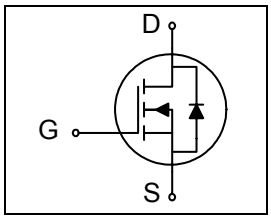

BV_{DSS} = 100V
$R_{DS(on)}$ = 0.026Ω
Typ = 0.023Ω
I_D = 50A

Absolute Maximum Ratings (T_C = 25°C Unless Otherwise Specified)

Symbol	Characteristic		Value	Units
V_{DSS}	Drain-Source Voltage		100	V
I_D	Continuous Drain Current (T_C = 25°C)		50	A
	Continuous Drain Current (T_C = 100°C)		35.3	
I_{DM}	Drain Current-Pulsed	(1)	200	A
V_{GS}	Gate-to-Source Voltage		± 20	V
E_{AS}	Single Pulsed Avalanche Energy	(2)	550	mJ
I_{AR}	Avalanche Current	(1)	50	A
E_{AR}	Repetitive Avalanche Energy	(1)	15	mJ
dv/dt	Peak Diode Recovery dv/dt	(3)	6	V/ns
P_D	Total Power Dissipation (T_C = 25°C)		150	W
	Linear Derating Factor		1	W/°C
T_J, T_{STG}	Operating Junction and Storage Temperature Range		-55 to +175	°C
T_L	Maximum Lead Temp. for soldering purposes, 1/8" from case for 5-seconds		300	°C

Thermal Characteristics

Symbol	Characteristic	Typ.	Max.	Units
$R_{\theta JC}$	Junction-to-Case	--	1	°C/W
$R_{\theta CS}$	Junction-to-Case-to-Sink	0.5	--	
$R_{\theta JA}$	Junction-to-Ambient	--	62.5	

Electrical Characteristics (T_C = 25°C unless otherwise specified)

Symbol	Characteristic	Min.	Typ.	Max.	Units	Test Condition
BV_{DSS}	Drain-Source Breakdown Voltage	100	--	--	V	V_{GS} = 0V, I_D = 250μA
$\Delta BV_{DSS}/\Delta T_J$	Breakdown Voltage Temp. Coeff.	--	0.11	--	V/°C	I_D = 250μA
$V_{GS(th)}$	Gate Threshold Voltage	2.5	--	4.0	V	V_{DS} = V_{GS}, I_D = 250μA
I_{GSS}	Gate-Source Leakage, Forward	--	--	100	nA	V_{GS} = 20V
	Gate-Source Leakage, Reverse	--	--	-100		V_{GS} = -20V
I_{DSS}	Drain-to-Source Leakage Current	--	--	1	μA	V_{DS} = 100V
		--	--	10		V_{DS} = 80V, T_C = 125°C
$R_{DS(on)}$	Static Drain-Source On-State Resistance	--	0.023	0.026	Ω	V_{GS} = 10V, I_D = 25A (4)
g_{fs}	Forward Transconductance	--	37	--	℧	V_{DS} = 25V, I_D = 25A (4)
C_{iss}	Input Capacitance	--	2060	2680	pF	V_{GS} = 0V, V_{DS} = 25V, f = 1MHz
C_{oss}	Output Capacitance	--	325	420		
C_{rss}	Reverse Transfer Capacitance	--	56	73		
$t_{d(on)}$	Turn-On Delay Time	--	17.5	45	ns	V_{DD} = 50V, I_D = 50A, R_G = 25Ω (4)(5)
t_r	Rise Time	--	108	226		
$t_{d(off)}$	Turn-Off Delay Time	--	136	282		
t_f	Fall Time	--	137	284		
Q_g	Total Gate Charge	--	57.5	75.0	nC	V_{DS} = 80V, V_{GS} = 10V, I_D = 50A (4)(5)
Q_{gs}	Gate-Source Charge	--	12.0	--		
Q_{gd}	Gate-Drain("Miller") Charge	--	21.6	--		

Source-Drain Diode Ratings and Characteristics

Symbol	Characteristic	Min.	Typ.	Max.	Units	Test Condition
I_S	Continuous Source Current	--	--	50	A	Integral reverse pn-diode in the MOSFET
I_{SM}	Pulsed Source Current (1)	--	--	200		
V_{SD}	Diode Forward Voltage (4)	--	--	1.3	V	I_S = 50A, V_{GS} = 0V
t_{rr}	Reverse Recovery Time	--	93	--	ns	I_F = 50A, V_{GS} = 0V, dI_F / dt = 100A/μs (4)
Q_{rr}	Reverse Recovery Charge	--	323	--	nC	

Notes:

(1). Repetitive Rating : Pulse Width Limited by Maximum Junction Temperature
(2). L = 330uH, I_{AS} =50A, V_{DD} = 25V, R_G = 25Ω, Starting T_J = 25°C
(3). $I_{SD} \leq$ 50A, di/dt $\leq$ 300A/μs, $V_{DD} \leq BV_{DSS,}$ Starting T_J = 25°C
(4). Pulse Test : Pulse Width $\leq$ 300μs, Duty Cycle $\leq$ 2%
(5). Essentially Independent of Operating Temperature

Typical Characterisics

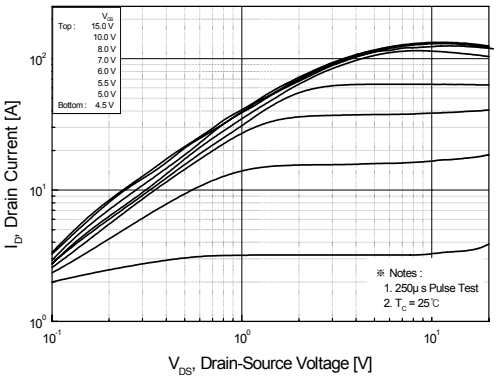

Fig 1. On-Region Characteristics

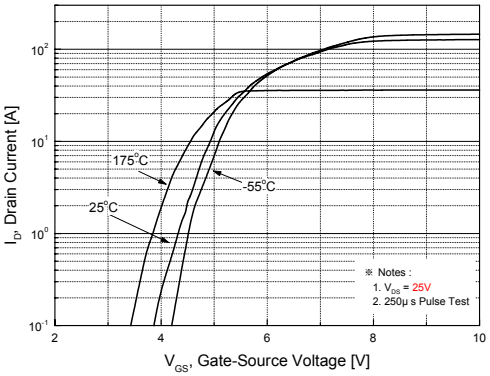

Fig 2. Transfer Characteristics

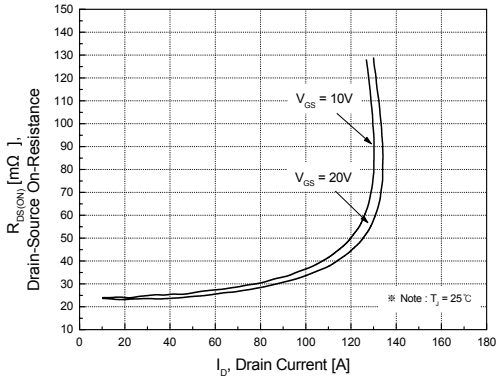

Fig 3. On-Resistance Variation vs. Drain Current and Gate Voltage

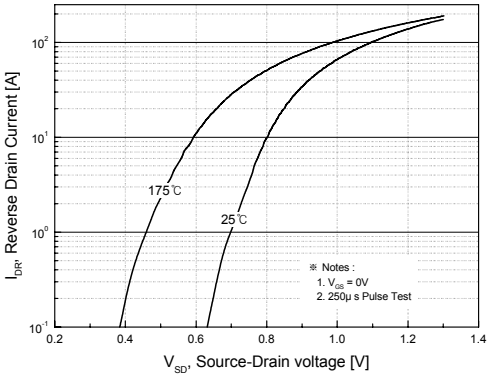

Fig 4. Body Diode Forward Voltage Variation vs. Source Current and

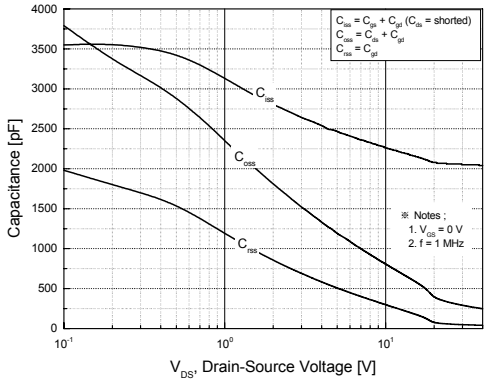

Fig 5. Capacitance Characteristics

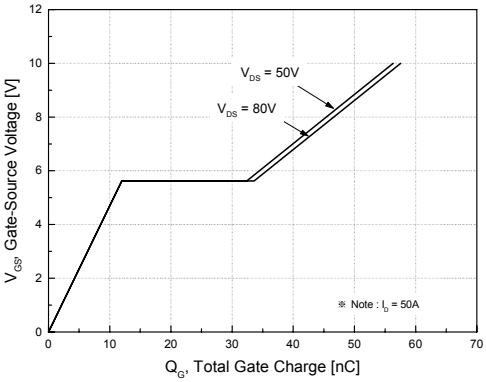

Fig 6. Gate Charge Characteristics

Typical Charateristics

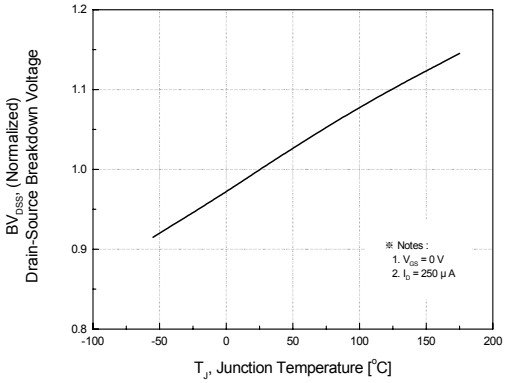

Fig 7. Breakdown Voltage Variation vs. Temperature

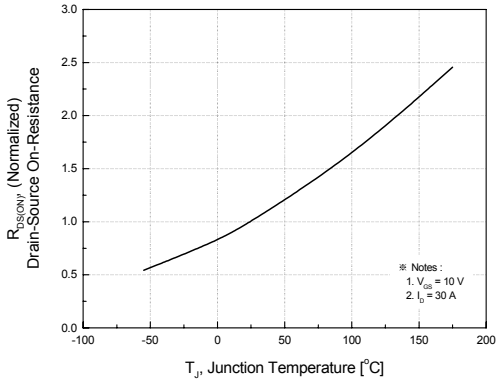

Fig 8. On-Resistance Variation vs Temperature

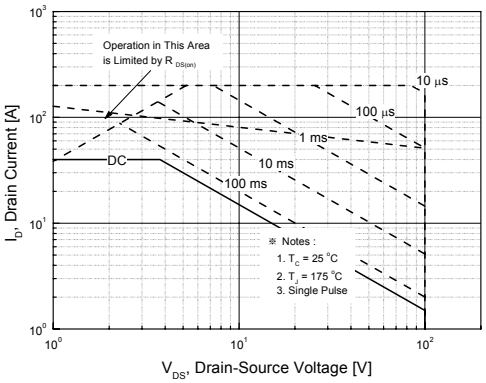

Fig 9. Maximum Safe Operating Area

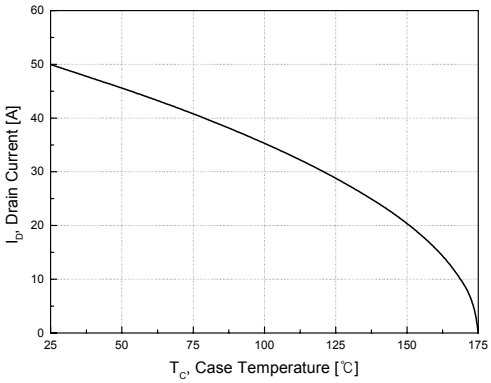

Fig 10. Maximum Drain Current vs. Case Temperature

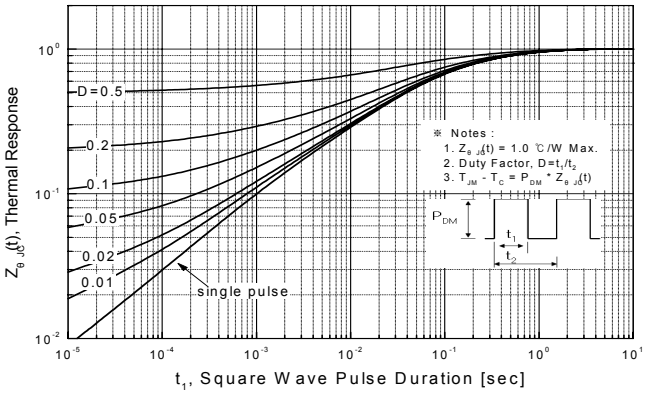

Fig 11. Transient Thermal Response Curve

Test Circuit and waveform

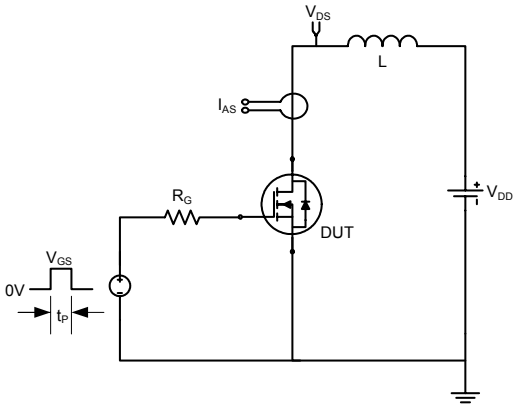

Unclamped Energy Test Circuit

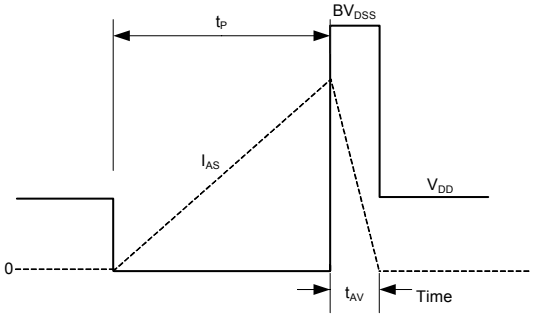

Unclamped Energy Waveforms

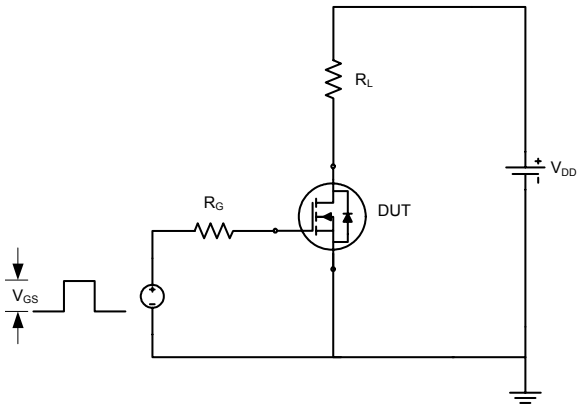

Switching Time Test Circuit

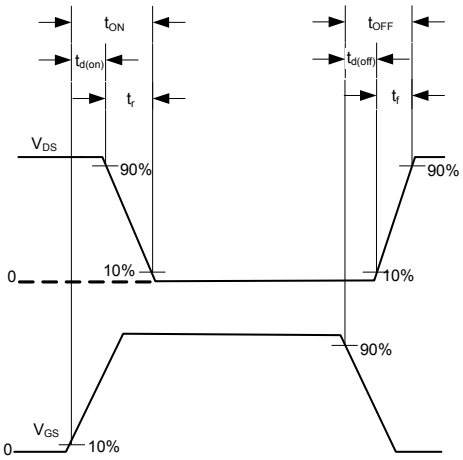

Resistive Switching Waveforms

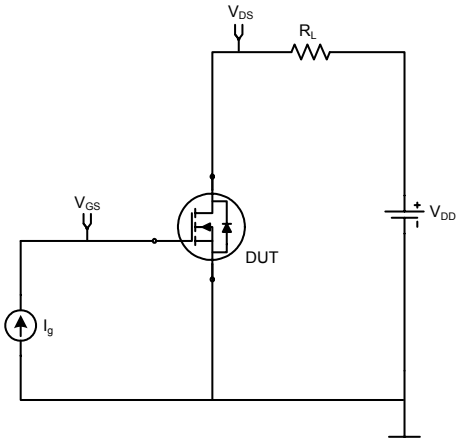

Gate Charge Test Circuit

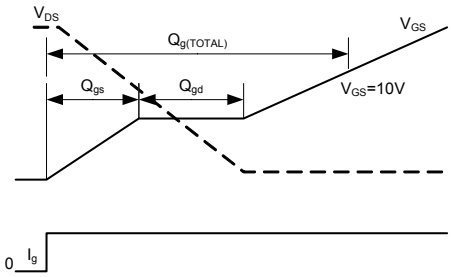

Gate Charge Waveforms

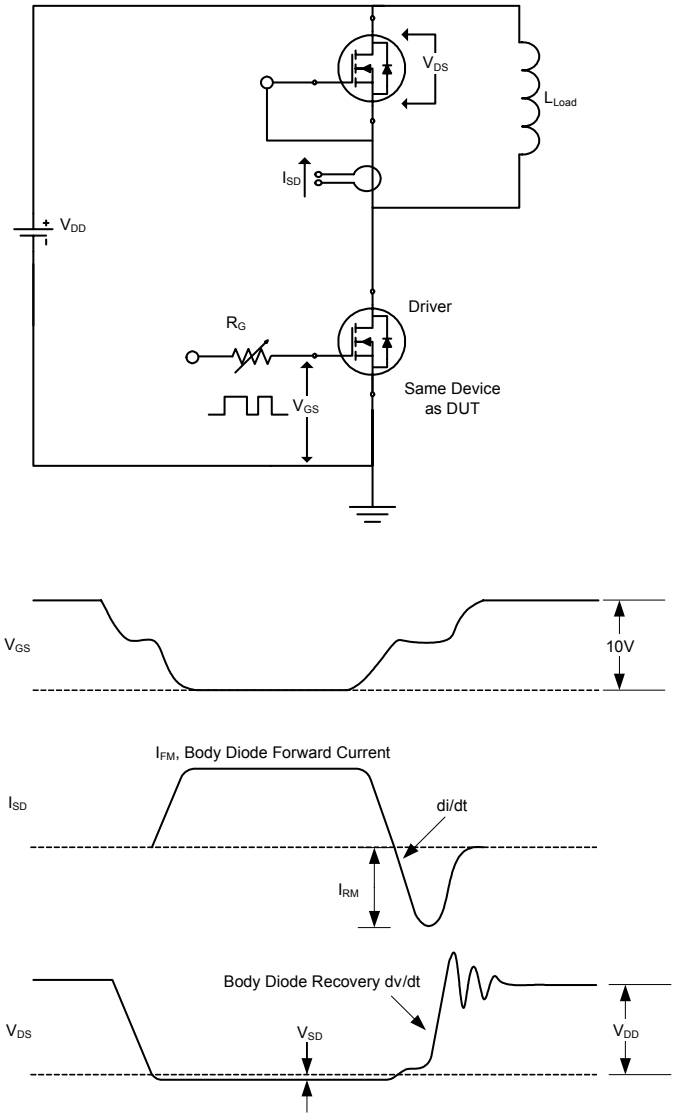

Body Diode Recovery dv/dt Test Circuit and Waveform

Package Dimensions

TO-220