iW7025

16-Channel LED Driver for LCD Panel Backlighting

1.0 Features

- 16-channel LED driver, 85V (max) per channel
- Dynamic external Boost or Buck controller interface to optimize system power efficiency
  - » Dual interface for one or two DC-DC converters.
  - » Programmable LED channel assignment for individual DC-DC converters.
- Channel current matching accuracy ±2%
- Absolute current accuracy ±0.5%
- External MOSFET/BJT for LED driver
- BJT base current compensation
- 10V to 28V input power supply
- 13-bit PWM dimming and 8-bit analog dimming
- Scanning mode PWM dimming control
- Internal PLL clock locked VSYNC or external master input clock
- VSYNC frequency from 50Hz to 4KHz
- Comprehensive protection features
  - » LED open fault detection
  - » 2-bit programmable LED short level (3V/6V/9V/12V) fault detection/protection
  - » External current sense resistor short protection
  - » External MOSFET Drain-Source short detection
  - » Over-temperature protection
  - » Micro-controller interrupt interface
- Simplified MCU control when multiple iW7025 are used
  - » SPI daisy-chain
  - » Open-drain fault status output
- Package
  - » QFP64 with 10mm x 10mm body at 0.5mm pitch
  - » QFP64 with 14mm x 14mm body at 0.8mm pitch
- Pin-out optimized for a single-layer PCB layout

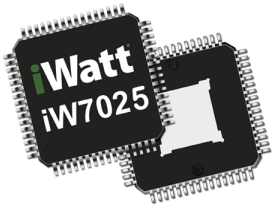

2.0 Description

The iW7025 is a versatile, 16-channel, high precision LED backlight driver for medium to large size LCD display panels.

The LED current sink MOSFETs/BJTs are external, allowing maximum flexibility for different current and voltage configurations. Built-in safety features include over-temperature shutdown, LED open and short protection, external sense resistor open protection, and external MOSFET drain and source short detection.

Internal PLL simplifies the system requirement with only VSYNC signal needed. Jitter on VSYNC is filtered internally with using PLL for precise PWM synchronization.

SPI daisy-chain interface simplifies design when multiple iW7025s are used to support more than 16 LED strings.

3.0 Applications

- LED backlighting for LCD-TV sets and LCD monitors

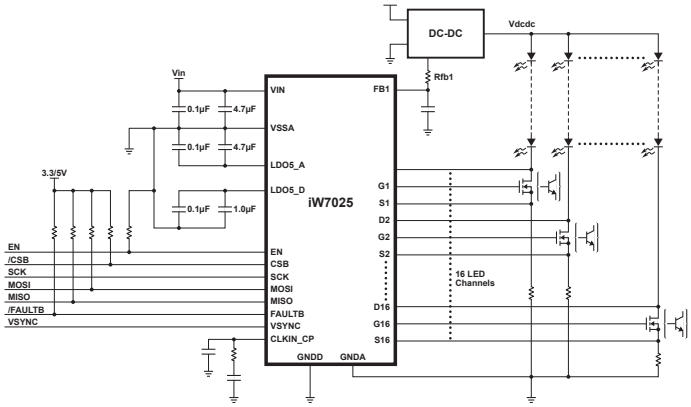

Figure 3.1 : iW7025 Simplified Application Diagram with Single DC-DC Converter

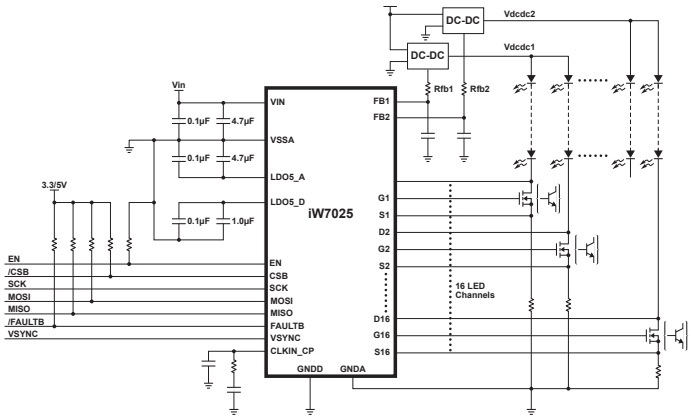

Figure 3.2 : iW7025 Simplified Application Diagram with Dual DC-DC Converters

4.0 Pinout Description

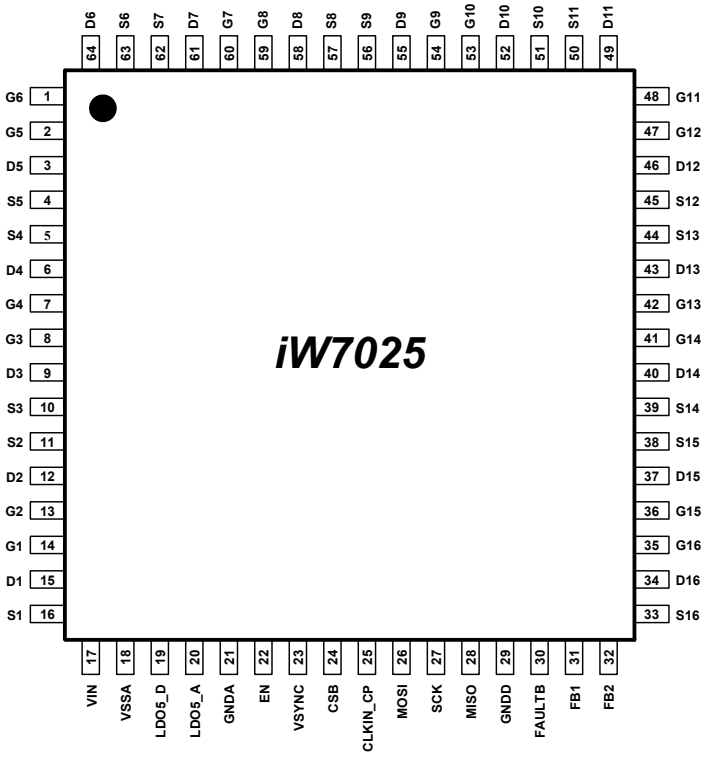

Pin #	Name	Type	Pin Description
1	G6	Analog Output	Gate of external MOSFET/base of external BJT
2	G5	Analog Output	Gate of external MOSFET/base of external BJT
3	D5	Analog Input	Drain of external MOSFET/Collector of external BJT
4	S5	Analog Input	Source of external MOSFET/Emitter of external BJT
5	S4	Analog Input	Source of external MOSFET/Emitter of external BJT
6	D4	Analog Input	Drain of external MOSFET/Collector of external BJT
7	G4	Analog Output	Gate of external MOSFET/base of external BJT
8	G3	Analog Output	Gate of external MOSFET/base of external BJT
9	D3	Analog Input	Drain of external MOSFET/Collector of external BJT
10	S3	Analog Input	Source of external MOSFET/Emitter of external BJT
11	S2	Analog Input	Source of external MOSFET/Emitter of external BJT
12	D2	Analog Input	Drain of external MOSFET/Collector of external BJT
13	G2	Analog Output	Gate of external MOSFET/base of external BJT
14	G1	Analog Input	Gate of external MOSFET/base of external BJT
15	D1	Analog Input	Drain of external MOSFET/Collector of external BJT
16	S1	Analog Input	Source of external MOSFET/Emitter of external BJT
17	V_{IN}	Analog Input	Chip power supply input
18	VSSA	Ground	Quiet analog ground for voltage and current references

Pin #	Name	Type	Pin Description
19	LDO5_D	Analog Output	LDO compensation pin for internal digital power supply
20	LDO5_A	Analog Output	LDO compensation pin for internal analog power supply
21	GNDA	Ground	Ground sensing for ILED ground on PCB. Put ILED ground as close as possible to this pin
22	EN	Digital Input	Chip enable input (Logic high = 3.3V)
23	VSYNC	Digital Input	VSYNC clock input in SPI dimming mode
24	CSB	Digital Input	SPI interface chip select input, active low. (Logic high = 3.3V)
25	CLKIN_CP	Digital Input	If PLL is used, this pin is used for PLL filter. If external clock input is used, this pin is used as external clock input
26	MOSI	Digital Input	SPI interface data input (Logic high = 3.3V)
27	SCK	Digital Input	SPI interface clock input (Logic high = 3.3V)
28	MISO	Digital Output	SPI interface data output
29	GNDD	Ground	Digital ground
30	FAULTB	Digital Output	Fault output (active low, open drain)
31	FB1	Analog Input	Analog DAC output interface with external Buck or Boost converter for LED Boost/Buck group 1
32	FB2	Analog Input	Analog DAC output interface with external Buck or Boost converter for LED Boost/Buck group 2
33	S16	Analog Input	Source of external MOSFET/Emitter of external BJT
34	D16	Analog Input	Drain of external MOSFET/Collector of external BJT
35	G16	Analog Output	Gate of external MOSFET/base of external BJT
36	G15	Analog Output	Gate of external MOSFET/base of external BJT
37	D15	Analog Input	Drain of external MOSFET/Collector of external BJT
38	S15	Analog Input	Source of external MOSFET/Emitter of external BJT
39	S14	Analog Input	Source of external MOSFET/Emitter of external BJT
40	D14	Analog Input	Drain of external MOSFET/Collector of external BJT
41	G14	Analog Output	Gate of external MOSFET/base of external BJT
42	G13	Analog Output	Gate of external MOSFET/base of external BJT
43	D13	Analog Input	Drain of external MOSFET/Collector of external BJT
44	S13	Analog Input	Source of external MOSFET/Emitter of external BJT
45	S12	Analog Input	Source of external MOSFET/Emitter of external BJT
46	D12	Analog Input	Drain of external MOSFET/Collector of external BJT
47	G12	Analog Output	Gate of external MOSFET/base of external BJT
48	G11	Analog Output	Gate of external MOSFET/base of external BJT
49	D11	Analog Input	Drain of external MOSFET/Collector of external BJT
50	S11	Analog Input	Source of external MOSFET/Emitter of external BJT

Pin #	Name	Type	Pin Description
51	S10	Analog Input	Source of external MOSFET/Emitter of external BJT
52	D10	Analog Input	Drain of external MOSFET/Collector of external BJT
53	G10	Analog Input	Gate of external MOSFET/base of external BJT
54	G9	Analog Output	Gate of external MOSFET/base of external BJT
55	D9	Analog Input	Drain of external MOSFET/Collector of external BJT
56	S9	Analog Input	Source of external MOSFET/Emitter of external BJT
57	S8	Analog Input	Source of external MOSFET/Emitter of external BJT
58	D8	Analog Input	Drain of external MOSFET/Collector of external BJT
59	G8	Analog Output	Gate of external MOSFET/base of external BJT
60	G7	Analog Input	Gate of external MOSFET/base of external BJT
61	D7	Analog Input	Drain of external MOSFET/Collector of external BJT
62	S7	Analog Input	Source of external MOSFET/Emitter of external BJT
63	S6	Analog Input	Source of external MOSFET/Emitter of external BJT
64	D6	Analog Input	Drain of external MOSFET/Collector of external BJT

5.0 Absolute Maximum Ratings

Absolute maximum ratings are the parameter values or ranges which can cause permanent damage if exceeded. For maximum safe operating conditions, refer to iW7025 datasheet for more information.

Symbol	Parameter	Min	Max	Unit	Notes
V_{IN}	DC supply voltage at V_{IN}	-0.3	28	V	V_{IN} only
V_{5V}	Maximum voltage for 5V pins	-0.3	7	V	All pins except VIN and D1-D16
V_{Dx}	Maximum voltage for pin D1-D16	-0.3	85	V	D1-D16 pins
$I_{latchup}$	Latch-up immunity	-100	100	mA	Norm: EIA/JESD78
T_{STRG}	Storage temperature	-55	150	°C	Maximum Junction Temperature
	Humidity	5	85	%	Non Condensing
V_{ESD}	Electrostatic discharge on all 5V pins	-2000	2000	V	Norm: MIL 883 E Method 3015 Human body model
T_{BODY}	Body temperature during soldering		260	°C	According to IPC/JEDEC J-STD-020C

6.0 Recommended Operating Conditions

Symbol	Parameter	Conditions	Min	Typ	Max	Unit
θ_{JA}	Thermal resistance junction			50		°C/W
$C_{operate}$	Operating temperature		-40		90	°C
T_j	Junction temperature		-40		145	°C
V_{IN}	Supply voltage		10		28	V

7.0 Physical Dimensions

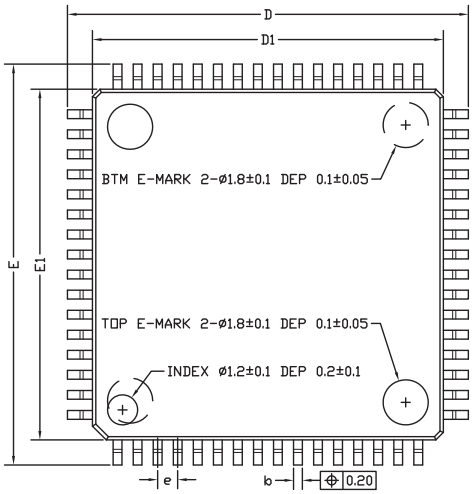

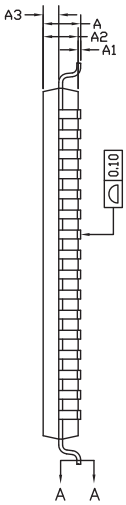

COMMON DIMENSIONS
(UNITS OF MEASURE=MILLIMETER)

SYMBOL	MIN	NOM	MAX
A	–	–	1.60
A1	0.05	–	0.15
A2	1.35	1.40	1.45
A3	0.59	0.64	0.69
b	0.31	–	0.44
b1	0.30	0.35	0.40
c	0.13	–	0.18
c1	0.12	0.127	0.134
D	15.80	16.00	16.20
D1	13.90	14.00	14.10
E	15.80	16.00	16.20
E1	13.90	14.00	14.10
e	0.70	0.80	0.90
L	0.45	0.60	0.75
L1	1.00REF		
L2	0.25BSC		
R1	0.08	–	–
R2	0.08	–	0.20
S	0.20	–	–
θ	0°	3.5°	7°
θ1	0°	–	–
θ2	11°	12°	13°
θ3	11°	12°	13°

NOTES:
ALL DIMENSIONS MEET JEDEC STANDARD MS–026 BEB DO NOT INCLUDE MOLD FLASH OR PROTRUSIONS.

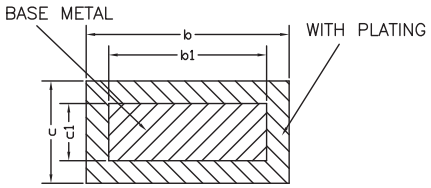

SECTION A–A

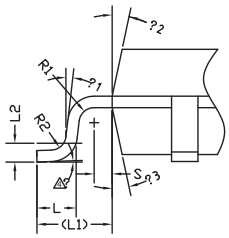

Package Code: LQ6

Figure 7.1 : Physical dimensions for QFP64 with 14mm x 14mm body at 0.8mm pitch

This product is RoHS compliant and Halide free. Package is IPC/JEDEC Std 020D Moisture Sensitivity Level 3

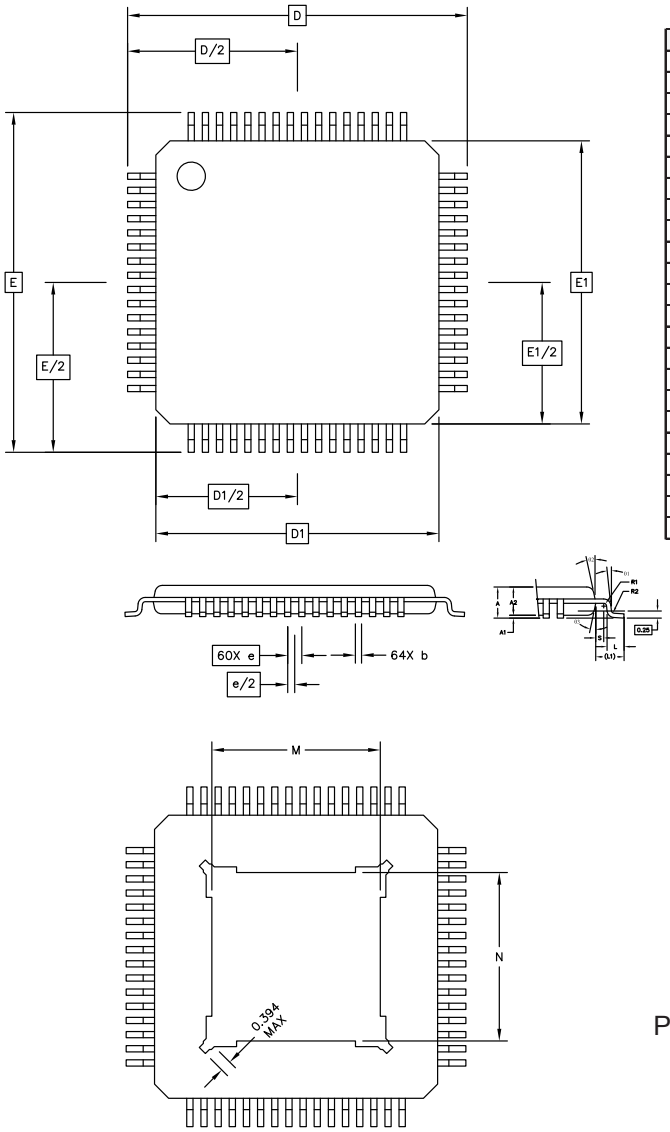

DIM	Min		Max
A	- - -		1.20
A1	0.05		0.15
A2	0.95	1.00	1.05
b	0.17	0.22	0.27
b1	0.17	0.20	0.23
c	0.09		0.20
c1	0.09		0.16
D		12 BSC	
D1		10 BSC	
e		0.5 BSC	
E		12 BSC	
E1		10 BSC	
L	0.45	0.60	0.08
L1		1 Ref.	
R1	0.08		- - -
R2	0.08		0.20
S	0.20		- - -
θ	0°	3.5°	7°
θ1	0°		- - -
θ2	11°	12°	13°
θ3	11°	12°	13°
M	5.85		6.05
N	5.85		6.05

Package Code: TQ1E

Figure 7.1 : Physical dimensions for QFP64 with 10mm x 10mm body at 0.5mm pitch

This product is RoHS compliant and Halide free. Package is IPC/JEDEC Std 020D Moisture Sensitivity Level 3

8.0 Ordering Information

Part Number	Options	Package	Description
iW7025-00-TQ1E		TQFPEP-10m-64L	Tape & Reel[1]
iW7025-00-LQ6		LQFP-14m-64L	Tape & Reel[2]

Note 1: Tape & Reel packing quantity is 1,250/reel.

Note 2: Tape & Reel packing quantity is 1,000/reel.

Trademark Information

Contact Information

Web: https://www.iwatt.com

E-mail: info@iwatt.com

Phone: +1 (408) 374-4200

Fax: +1 (408) 341-0455

iWatt Inc.
675 Campbell Technology Parkway, Suite 150
Campbell, CA 95008

Disclaimer and Legal Notices

iWatt reserves the right to make changes to its products and to discontinue products without notice. The applications information, schematic diagrams, and other reference information included herein is provided as a design aid only and are therefore provided as-is. iWatt makes no warranties with respect to this information and disclaims any implied warranties of merchantability or non-infringement of third-party intellectual property rights.

This product is covered by the following patents: 6,385,059; 6,370,039; 6,862,198; 6,900,995; 6,956,750; 6,990,900; 7,443,700; 7,505,287; 7,589,983; 6,972,969; 7,724,547; 7,876,582; 7,880,447; 7,974,109; 8,018,743; 8,049,481; 7,936,132; 7,433,211; 6,944,034. A full list of iWatt patents can be found at www.iwatt.com.

Certain applications using semiconductor products may involve potential risks of death, personal injury, or severe property or environmental damage ("Critical Applications").

iWATT SEMICONDUCTOR PRODUCTS ARE NOT DESIGNED, INTENDED, AUTHORIZED, OR WARRANTED TO BE SUITABLE FOR USE IN LIFE-SUPPORT APPLICATIONS, DEVICES OR SYSTEMS, OR OTHER CRITICAL APPLICATIONS.

Inclusion of iWatt products in critical applications is understood to be fully at the risk of the customer. Questions concerning potential risk applications should be directed to iWatt Inc.

iWatt semiconductors are typically used in power supplies in which high voltages are present during operation. High-voltage safety precautions should be observed in design and operation to minimize the chance of injury.