Ordering number : ENA1558

SANYO Semiconductors

DATA SHEET

An ON Semiconductor Company

Bi-CMOS IC

LV5810M — Step-down Switching Regulator

Overview

LV5810M is a 1ch step-down switching regulator. 0.13Ω FET is incorporated on the upper side to achieve high-efficiency operation for large output current. Low-heat resistance and compact-package MFP8 (225mil) employed. Current mode control type, with superior load current response and easy phase compensation ON/OFF pin, allowing the standby mode with the current drain of 100μA or less Pulse-by-pulse over-current protection and overheat protection available for protection of load devices Soft start pin to be provided with a capacitance for soft start.

Functions

- 2A 1ch step-down switching regulator
- Wide input dynamic range (to 28V)
- High efficiency (90% I_{OUT} = 1A, V_{IN} = 12V, V_O = 5V)
- Standby mode
- Over-current protection
- Thermal shutdown
- Reference voltage: 0.8V
- Fixed frequency: 370kHz
- Soft start
- Compact package: MFP8 (225mil)

Specifications

Maximum Ratings at Ta = 25°C

Parameter	Symbol	Conditions	Ratings	Unit
Maximum input V_{IN} voltage	V_{IN} max		32	V
BOOT pin maximum voltage	V_{BT} max		37	V
SW pin maximum voltage	V_{SW} max		V_{IN} max	V
BOOT pin-SW pin maximum voltage	V_{BS-SW} max		7	V
FB, COMP, SS pin maximum voltage	Vfs max		7	V
Allowable power dissipation	Pd max	Mount on a specified board *	1.15	W
Junction temperature	Tj max		150	°C
Operating temperature	Topr		-20 to 80	°C
Storage temperature	Tstg		-40 to 150	°C

* Specified board: 46.4mm × 31.8mm ×1.7mm, glass epoxy both side.

Note: Plan the maximum voltage while including coil and surge voltages, so that the maximum voltage is not exceeded even for an instant.

■ Any and all SANYO Semiconductor Co.,Ltd. products described or contained herein are, with regard to "standard application", intended for the use as general electronics equipment (home appliances, AV equipment, communication device, office equipment, industrial equipment etc.). The products mentioned herein shall not be intended for use for any "special application" (medical equipment whose purpose is to sustain life, aerospace instrument, nuclear control device, burning appliances, transportation machine, traffic signal system, safety equipment etc.) that shall require extremely high level of reliability and can directly threaten human lives in case of failure or malfunction of the product or may cause harm to human bodies, nor shall they grant any guarantee thereof. If you should intend to use our products for applications outside the standard applications of our customer who is considering such use and/or outside the scope of our intended standard applications, please consult with us prior to the intended use. If there is no consultation or inquiry before the intended use, our customer shall be solely responsible for the use.

■ Specifications of any and all SANYO Semiconductor Co.,Ltd. products described or contained herein stipulate the performance, characteristics, and functions of the described products in the independent state, and are not guarantees of the performance, characteristics, and functions of the described products as mounted in the customer's products or equipment. To verify symptoms and states that cannot be evaluated in an independent device, the customer should always evaluate and test devices mounted in the customer's products or equipment.

Recommended Operating Conditions at Ta = 25°C

Parameter	Symbol	Conditions	Ratings	Unit
V_{IN} pin voltage	V_{IN}		8 to 28	V
BOOT pin voltage	V_{BT}		-0.3 to 34	V
SW pin voltage	V_{SW}		-0.4 to V_{IN}	V
BOOT pin-SW pin maximum voltage	V_{BS-SW}		6.5	V
FB, COMP, SS pin voltage	V_{FSO}		6	V

Electrical Characteristics at Ta = 25°C, V_{IN} = 12V, unless otherwise specified.

Parameter	Symbol	Conditions	Ratings			Unit
			min	typ	max	
IC current drain at standby	$I_{CC}1$	EN=0V		70		μA
IC current drain in operation	$I_{CC}2$	EN=OPEN, FB=1V		5		mA
Efficiency	Effcy	V_{IN}=12V, I_{OUT}=1A, Vo=5V, Design target *1		90		%
Reference voltage	Vref	V_{IN}=8V to 28V (±2%)	-2%	0.8	+2%	V
FB pin bias current	Iref	FB=0.8V application		10	100	nA
High-side ON resistance	RonH	BOOT=5V		0.13		Ω
Low-side ON resistance	RonL			6		Ω
Oscillation frequency	f_{OSC}		296	370	444	kHz
Oscillation frequency during short-circuit protection	f_{OSCS}		26	32	39	kHz
EN high-threshold voltage	Venh				1.9	V
EN low-threshold voltage	Venl		0.8			V
EN pull up current	I_{en}	EN = 0V		16		μA
Maximum ON DUTY	D max			80		%
Current limit peak value	Icl1	V_{IN}=12V, V_{OUT}=5V, L=10μH	4			A
Thermal shutdown temperature	Ttsd	*Design guarantee *2		160		°C
Thermal shutdown temperature hysteresis	Dtsd	*Design guarantee *2		40		°C
Soft start current	I_{SS}	SS=0V	6	10	14	μA

*1: Reference value (not tested before shipment)

*2: Design guarantee (value guaranteed by design and not tested before shipment)

Pin Assignment

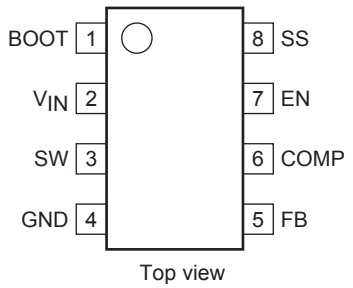

Package Dimensions

unit : mm (typ)

3032D

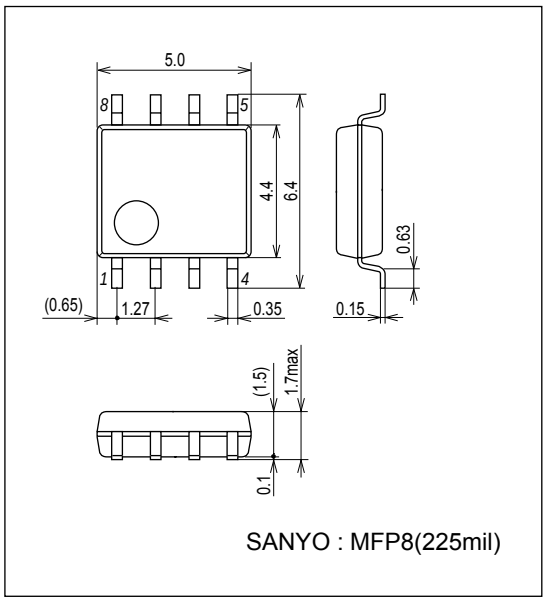

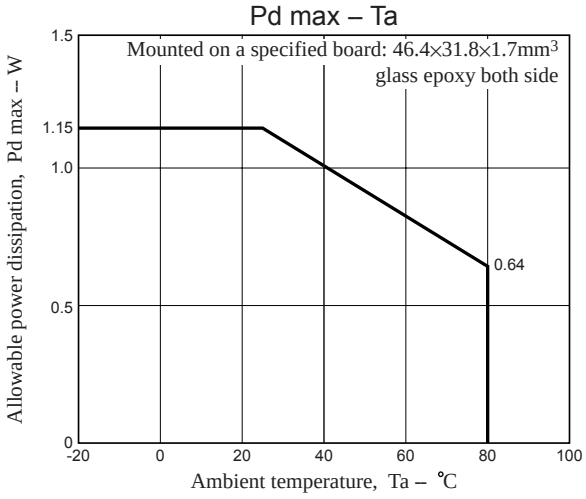

Block Diagram and Sample Application Circuit (3.3V output)

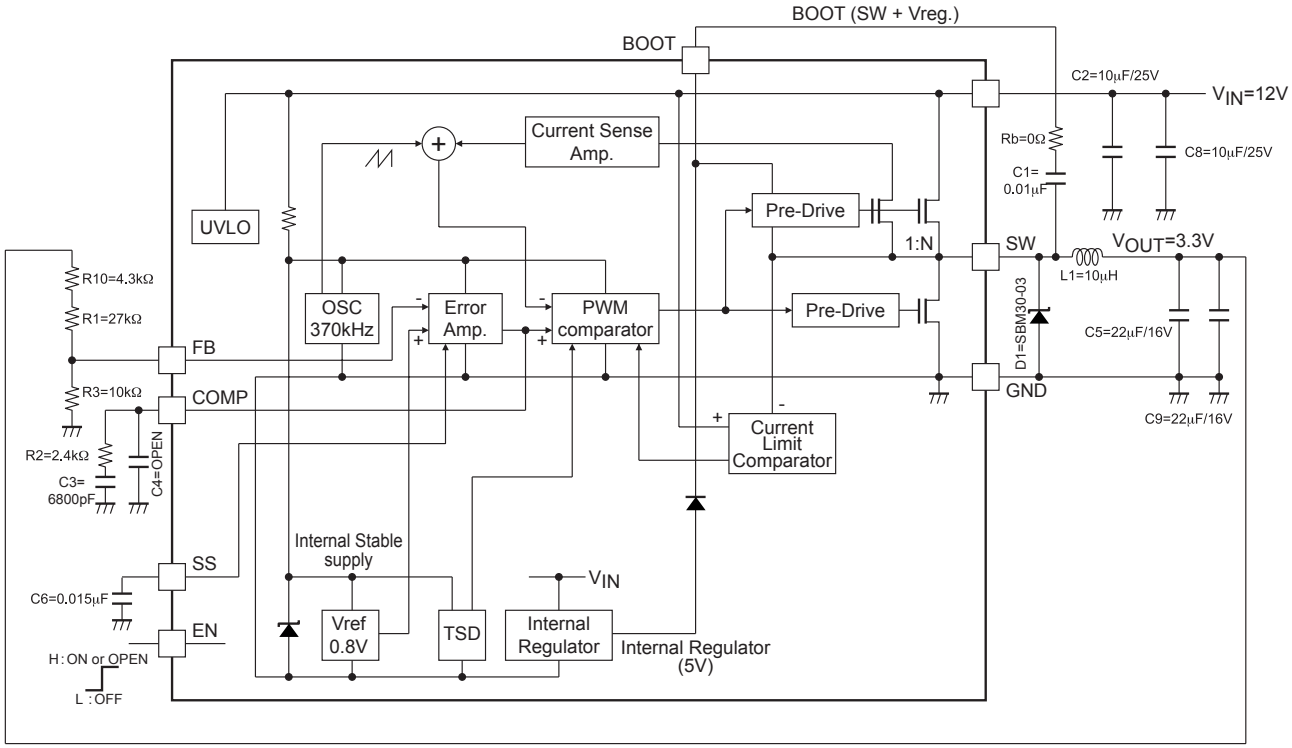

•C1,C8,C5,C9 = Ceramic capacitor
•L1 = CDRH105RNP-100NC (sumida)

Pin Function

Pin No.	Pin name	Function	Equivalent circuit
1	BOOT	Upper MOS transistor boot strap capacitance connection pin. Connect the boot capacitance of about 0.01μF between SW pins. To protect the SW pin's absolute maximum rating, to ensure stable operation, and to eliminate noise, the boot capacitance serial resistance (about 10Ω) Rb proves effective.	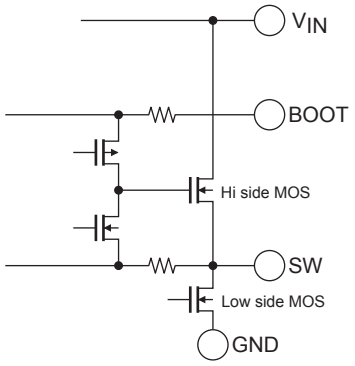
2	V_{IN}	Input voltage pin. Connect substantially large (20μF more) capacitance between this pin and GND.	
3	SW	Power switch pin. Connect the output LC filter. Connect the above capacitance between this pin and BOOT pin.	
4	GND	Ground pin.	
5	FB	Feedback pin. Sets the output voltage by means of split resistor in the section of the output voltage V_{OUT} - FB - GND. V_{OUT} setting is made as calculated below: $V_{OUT} = Vref \times \{1 + \frac{(R1 + R10)}{R3}\}$ Vref = 0.8V Example: 3.3V output voltage (See Block Diagram and Sample Application Circuit) $V_{OUT} = 0.8 \times \{1 + \frac{(27k + 4.3k)}{10k}\}$ =3.304V	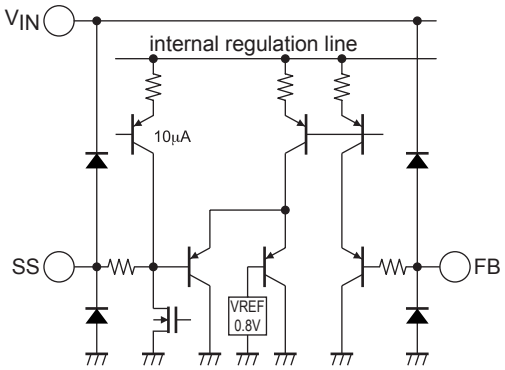
8	SS	Soft start pin. Sets the soft start time by means of the built-in 10μA source voltage and external soft start capacity. The soft start capacity C6 can be set as follows: $C6 = 10\mu A \times \frac{Tss}{Vref}$ Where, Tss is the soft start time and Vref is the reference voltage. Example: 1.2ms soft start time achieved $C6 = 10\mu A \times \frac{1.2ms}{0.8\ V} = 0.015\mu F$	
6	COMP	Phase compensation pin. Connects with the phase compensation external capacitance and resistance of DC/DC converter close loop.	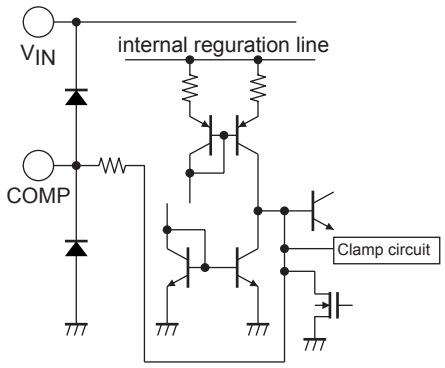
7	EN	Enable pin. Converter enabled when set to the HIGH voltage and disabled when LOW voltage or OPEN state.	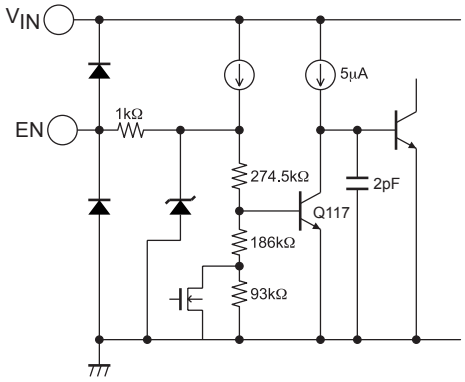

Considerations for the design

Insertion of serial beads in the Schottky diode for removal of noise may cause generation of the negative voltage deviating from the absolute maximum rating at the SW pin, resulting in failure of normal operation. In such an event, do not insert beads as above described and, instead, remove noise by means of the BOOT resistance Rb.

- SANYO Semiconductor Co.,Ltd. assumes no responsibility for equipment failures that result from using products at values that exceed, even momentarily, rated values (such as maximum ratings, operating condition ranges, or other parameters) listed in products specifications of any and all SANYO Semiconductor Co.,Ltd. products described or contained herein.
- SANYO Semiconductor Co.,Ltd. strives to supply high-quality high-reliability products, however, any and all semiconductor products fail or malfunction with some probability. It is possible that these probabilistic failures or malfunction could give rise to accidents or events that could endanger human lives, trouble that could give rise to smoke or fire, or accidents that could cause damage to other property. When designing equipment, adopt safety measures so that these kinds of accidents or events cannot occur. Such measures include but are not limited to protective circuits and error prevention circuits for safe design, redundant design, and structural design.
- In the event that any or all SANYO Semiconductor Co.,Ltd. products described or contained herein are controlled under any of applicable local export control laws and regulations, such products may require the export license from the authorities concerned in accordance with the above law.
- No part of this publication may be reproduced or transmitted in any form or by any means, electronic or mechanical, including photocopying and recording, or any information storage or retrieval system, or otherwise, without the prior written consent of SANYO Semiconductor Co.,Ltd.
- Any and all information described or contained herein are subject to change without notice due to product/technology improvement, etc. When designing equipment, refer to the "Delivery Specification" for the SANYO Semiconductor Co.,Ltd. product that you intend to use.
- Information (including circuit diagrams and circuit parameters) herein is for example only; it is not guaranteed for volume production.
- Upon using the technical information or products described herein, neither warranty nor license shall be granted with regard to intellectual property rights or any other rights of SANYO Semiconductor Co.,Ltd. or any third party. SANYO Semiconductor Co.,Ltd. shall not be liable for any claim or suits with regard to a third party's intellctual property rights which has resulted from the use of the technical information and products mentioned above.

This catalog provides information as of September, 2009. Specifications and information herein are subject to change without notice.

Mouser Electronics

Authorized Distributor

Click to View Pricing, Inventory, Delivery & Lifecycle Information:

ON Semiconductor:

LV5810M-TE-L-H