ORIENTAL SEMICONDUCTOR

RoHS compliant

OSG65R099HZ_Datasheet

GreenMOS™

Enhancement Mode N-Channel Power MOSFET

Features

- Ultra-fast and robust body diode
- Low $R_{DS(on)}$ & FOM
- Excellent low switching loss
- Excellent stability and uniformity
- Easy to drive

Applications

- PC power
- Server power supply
- Telecom
- Solar invertor
- Super charger for automobiles

■ General Description

OSG65R099HZ use advanced GreenMOS™ technology to provide low $R_{DS(ON)}$, low gate charge, fast switching and excellent avalanche characteristics. This device offers extremely fast and robust body diode, and is suitable for telecom and super charger applications.

- $V_{DS, min@Tjmax}$ 700 V
- $I_{D, pulse}$ 120 A
- $R_{DS(ON), max @ VGS=10 V}$ 99 mΩ
- Q_g 42.6 nC

■ Schematic and Package Information

Schematic Diagram	Pin Assignment-Top View
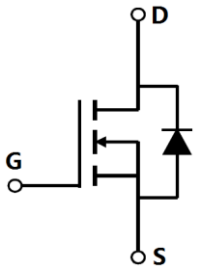	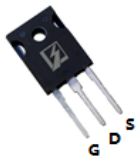 **TO247** **OSG65R099HZ**

■ Absolute Maximum Ratings at T_j=25℃ unless otherwise noted

Parameter	Symbol	Value	Unit
Drain source voltage	V_{DS}	650	V
Gate source voltage	V_{GS}	±30	V
Continuous drain current[1)]	I_D	40	A
Continuous drain current[1)] T_j=100 ℃		25	
Pulsed drain current[2)]	$I_{D, pulse}$	120	A
Power dissipation[3)]	P_D	278	W
Single pulsed avalanche energy[5)]	E_{AS}	1000	mJ
MOSFET dv/dt ruggedness, V_{DS}=0...480 V	dv/dt	50	V/ns
Reverse diode dv/dt, V_{DS}=0...480 V, $I_{SD} \leq I_D$	dv/dt	15	V/ns
Operation and storage temperature	T_{stg} , T_j	-55 to 150	℃

■ Thermal Characteristics

Parameter	Symbol	Value	Unit
Thermal resistance, junction-case	$R_{\theta JC}$	0.45	°C/W
Thermal resistance, junction-ambient[4)]	$R_{\theta JA}$	62	°C/W

■ Electrical Characteristics at T_j=25 ℃ unless otherwise specified

Parameter	Symbol	Min.	Typ.	Max.	Unit	Test condition
Drain-source breakdown voltage	BV_{DSS}	650			V	V_{GS}=0 V, I_D=1 mA
		700	770			V_{GS}=0 V, I_D=1 mA T_j=150 ℃
Gate threshold voltage	$V_{GS(th)}$	3		4.5	V	V_{DS}=V_{GS}, I_D=2 mA
Drain-source on-state resistance	$R_{DS(ON)}$		0.088	0.099	Ω	V_{GS}=10 V, I_D=20 A
			0.23			V_{GS}=10 V, I_D=20 A, T_j=150 ℃
Gate-source leakage current	I_{GSS}			100	nA	V_{GS}=30 V
				-100		V_{GS}=-30 V
Drain-source leakage current	I_{DSS}			10	μA	V_{DS}=650 V, V_{GS}=0 V

■ Dynamic Characteristics

Parameter	Symbol	Min.	Typ.	Max.	Unit	Test condition
Input capacitance	C_{iss}		3073		pF	V_{GS}=0 V, V_{DS}=50 V, f=1 MHz
Output capacitance	C_{oss}		448.8		pF	
Reverse transfer capacitance	C_{rss}		7.3		pF	
Turn-on delay time	$t_{d(on)}$		70.8		ns	V_{GS}=10 V, V_{DS}=400 V, R_G=25 Ω, I_D=20 A
Rise time	t_r		58.8		ns	
Turn-off delay time	$t_{d(off)}$		104.7		ns	
Fall time	t_f		70.2		ns	

■ Gate Charge Characteristics

Parameter	Symbol	Min.	Typ.	Max.	Unit	Test condition
Total gate charge	Q_g		42.5		nC	I_D=20 A, V_{DS}=400 V, V_{GS}=10 V
Gate-source charge	Q_{gs}		14		nC	
Gate-drain charge	Q_{gd}		12.2		nC	
Gate plateau voltage	$V_{plateau}$		6.0		V	

■ Body Diode Characteristics

Parameter	Symbol	Min.	Typ.	Max.	Unit	Test condition
Diode forward current	I_S			40	A	$V_{GS}<V_{th}$
Pulsed source current	I_{SP}			120		
Diode forward voltage	V_{SD}			1.4	V	I_S=40 A, V_{GS}=0 V
Reverse recovery time	t_{rr}		162		ns	I_S=20 A, di/dt=100 A/μs
Reverse recovery charge	Q_{rr}		1.12		μC	
Peak reverse recovery current	I_{rrm}		13		A	

■ Note

1) Calculated continuous current based on maximum allowable junction temperature.
2) Repetitive rating; pulse width limited by max. junction temperature.
3) Pd is based on max. junction temperature, using junction-case thermal resistance.
4) The value of $R_{\theta JA}$ is measured with the device mounted on 1 in 2 FR-4 board with 2oz. Copper, in a still air environment with T_a=25 °C.
5) V_{DD}=100 V, R_G=25 Ω, L=80 mH, starting T_j=25 °C.

■ Electrical Characteristics Diagrams

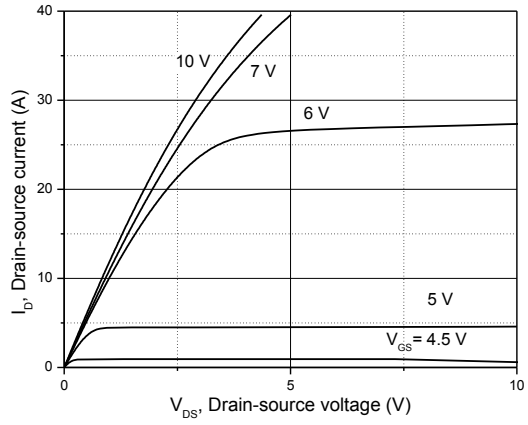

Figure 1, Typ. output characteristics

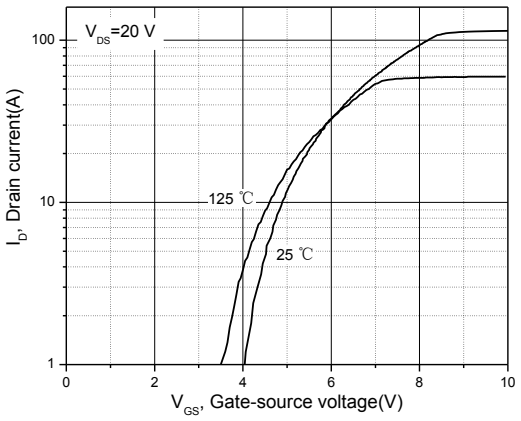

Figure 2, Typ. transfer characteristics

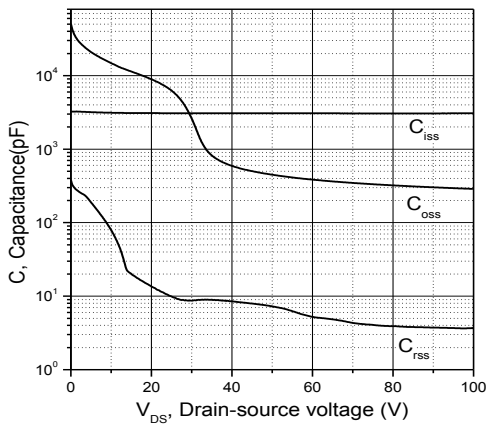

Figure 3, Typ. capacitances

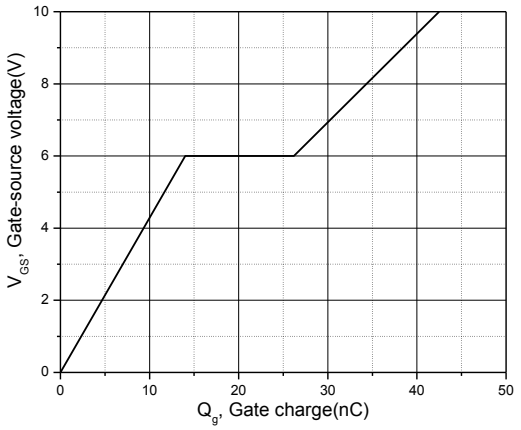

Figure 4, Typ. gate charge

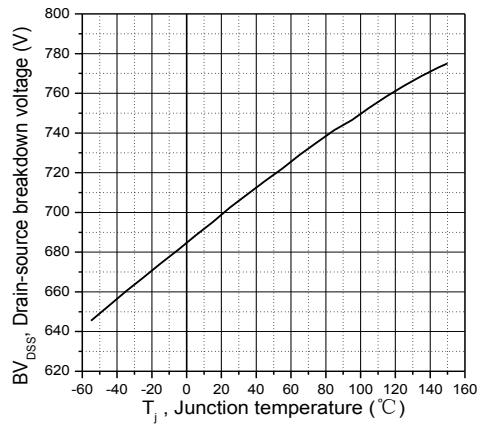

Figure 5, Drain-source breakdown voltage

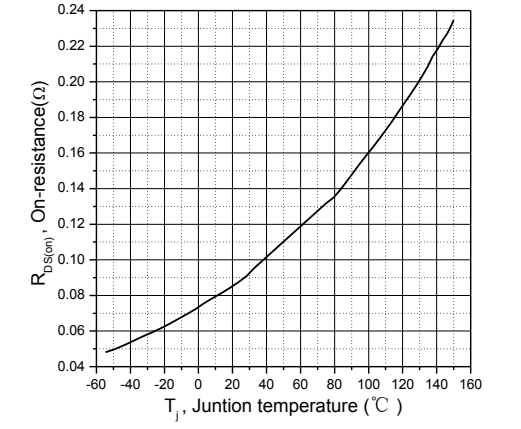

Figure 6, Drain-source on-state resistance

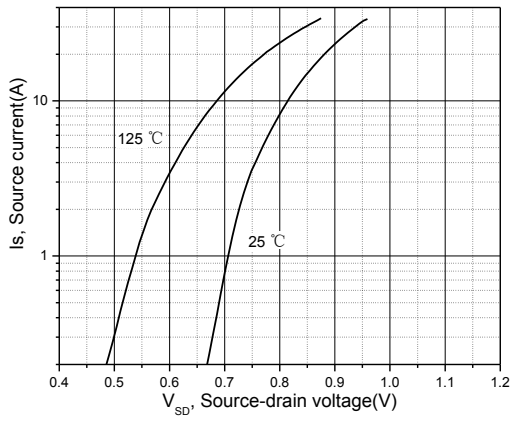

Figure 7, Forward characteristic of body diode

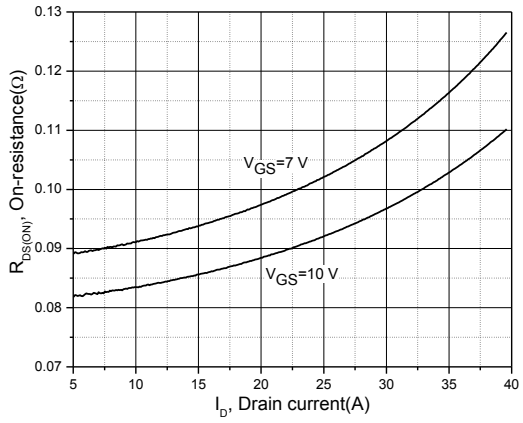

Figure 8, Drain-source on-state resistance

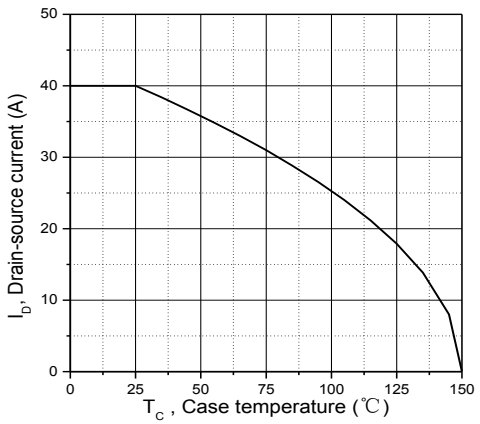

Figure 9, Drain current

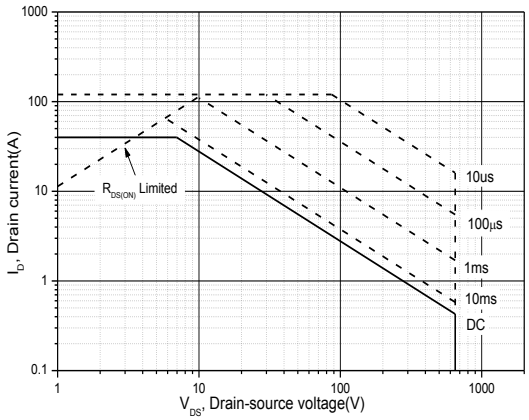

Figure 10, Safe operation area T_C=25 ℃

■ Test circuits and waveforms

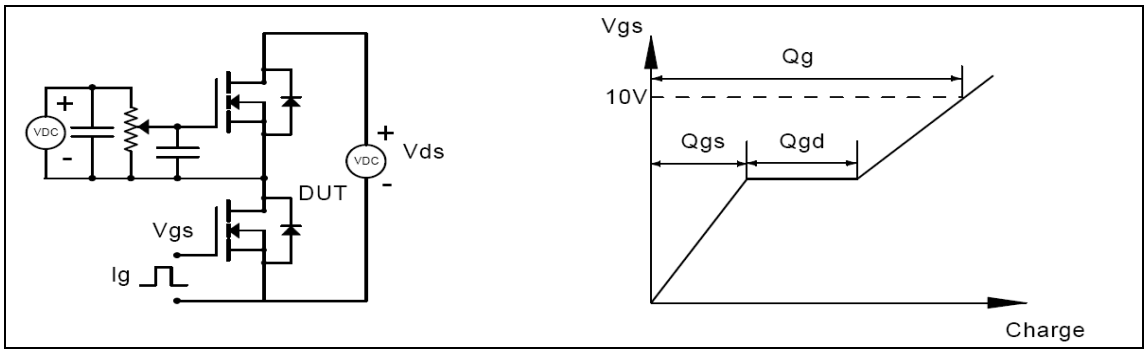

Figure 1, Gate charge test circuit & waveform

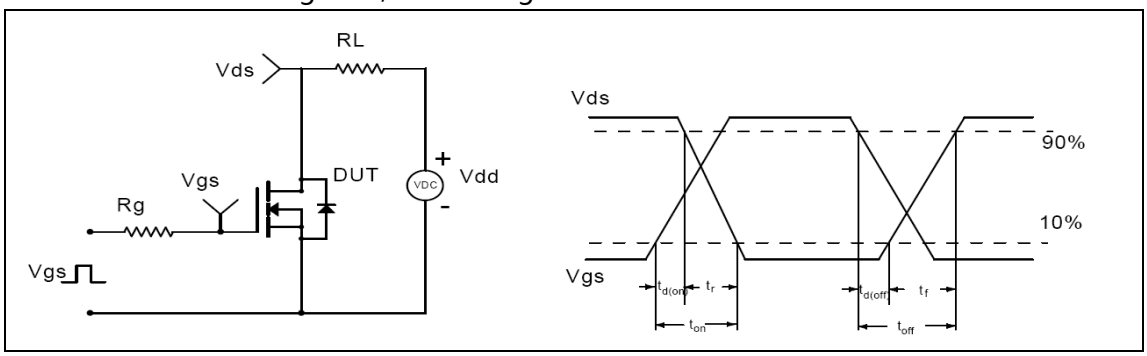

Figure 2, Switching time test circuit & waveforms

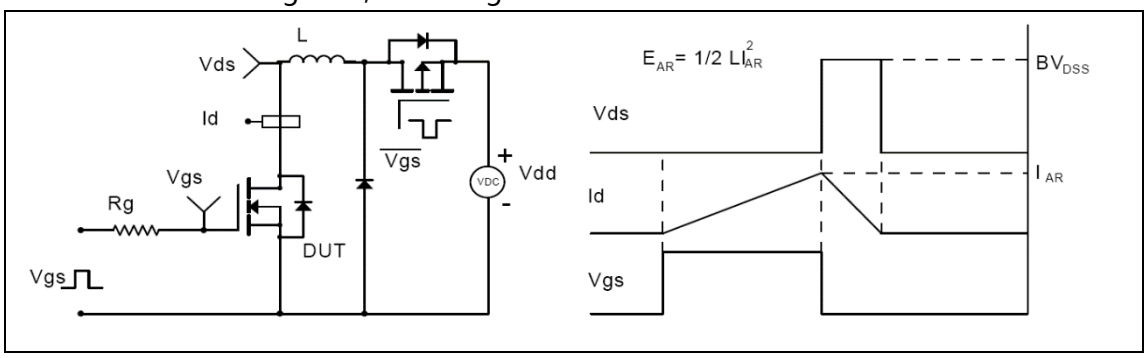

Figure 3, Unclamped inductive switching (UIS) test circuit & waveforms

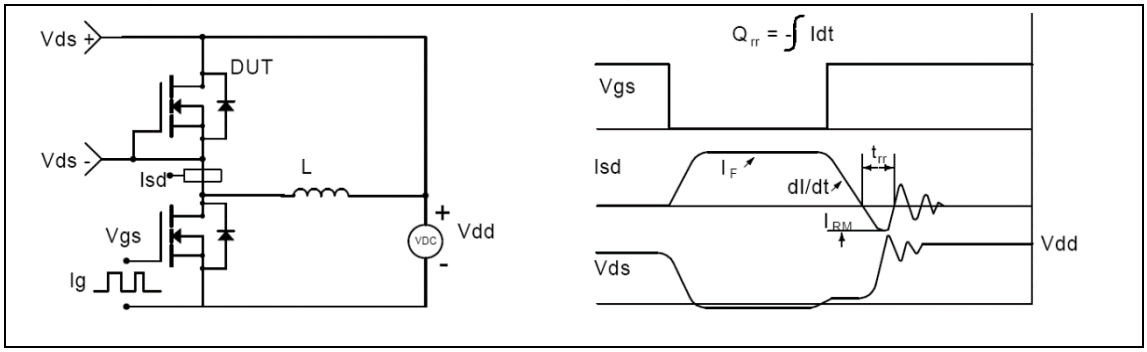

Figure 4, Diode reverse recovery test circuit & waveforms

■ Package Information

TO247 package outline dimension

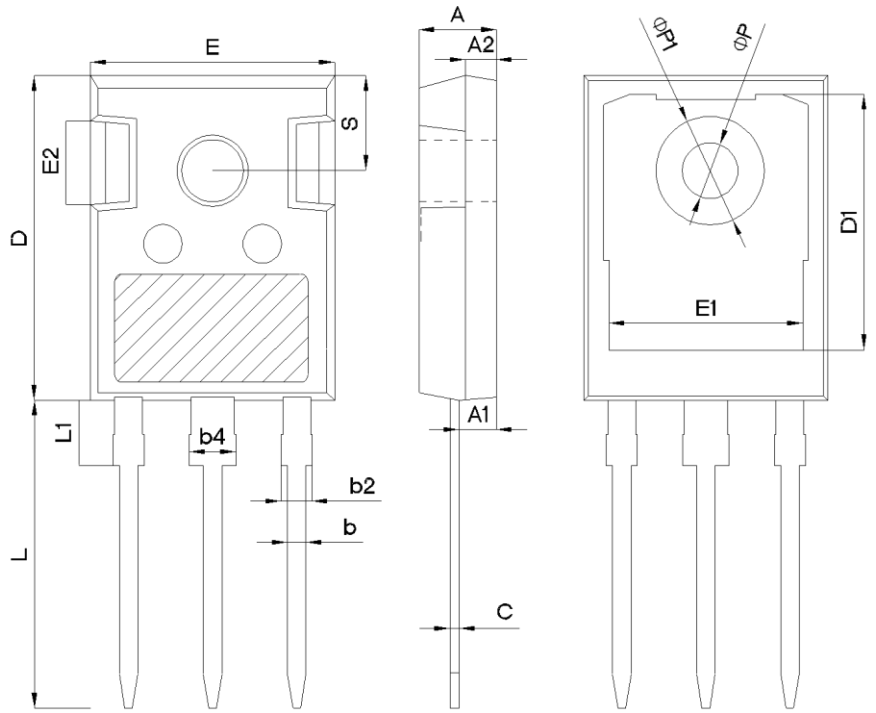

SYMBOL	mm		
	MIN	NOM	MAX
A	4.80	5.00	5.20
A1	2.21	2.41	2.61
A2	1.85	2.00	2.15
b	1.11	1.21	1.36
b2	1.91	2.01	2.21
b4	2.91	3.01	3.21
c	0.51	0.61	0.75
D	20.70	21.00	21.30
D1	16.25	16.55	16.85
E	15.50	15.80	16.10
E1	13.00	13.30	13.60
E2	4.80	5.00	5.20
E3	2.30	2.50	2.70
e	5.44BSC		
L	19.62	19.92	20.22
L1	-	-	4.30
ΦP	3.40	3.60	3.80
ΦP1	-	-	7.30
S	6.15BSC		

■ Ordering Information

Package	**Units/Tube**	**Tubes/Inner Box**	**Units/Inner Box**	**Inner Box/Carton Box**	**Units/Carton Box**
TO247	30	11	330	6	1980

■ Product Information

Product	Package	Pb Free	RoHS	Halogen Free
OSG65R099HZ	TO247	yes	yes	no
OSG65R099HZF	TO247	yes	yes	yes