HIGH COMMUTATION TRIAC

TO220-AB

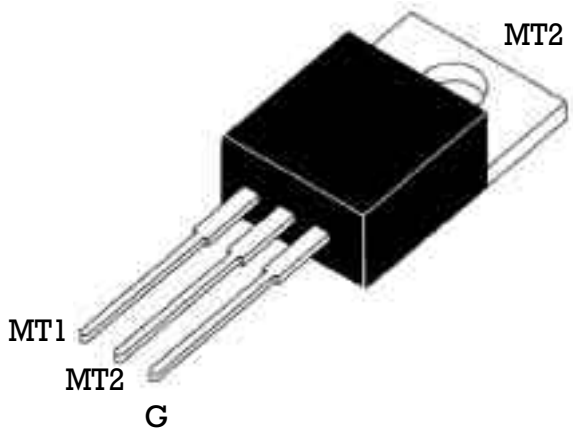

On-State Current
12 Amp

Gate Trigger Current
≤ 25 mA to ≤ 50 mA

Off-State Voltage
200 V ÷ 600 V

This series of **TRIAC**s uses a high performance PNPN technology.

These parts are intended for general purpose AC switching applications with highly inductive loads.

Absolute Maximum Ratings, according to IEC publication No. 134

SYMBOL	PARAMETER	CONDITIONS	Min.	Max.	Unit
$I_{T(RMS)}$	RMS On-state Current	Full sine wave, T_C = 105 °C	12		A
I_{TSM}	Non-repetitive On-State Current	Full Cycle, 60 Hz t = 16.7 ms	125		A
I_{TSM}	Non-repetitive On-State Current	Full Cycle, 50 Hz t = 20 ms	120		A
I^2t	Fusing Current	t_p = 10 ms, Half Cycle	80		A^2s
I_{GM}	Peak Gate Current	20 µs max. T_j =125°C		4	A
$P_{G(AV)}$	Average Gate Power Dissipation	T_j =125°C		1	W
di/dt	Critical rate of rise of on-state current	I_G = 2x I_{GT}, t_r ≤100ns f= 120 Hz, T_j =125°C	50		A/µs
T_j	Operating Temperature		-40	+125	°C
T_{stg}	Storage Temperature		-40	+150	°C

SYMBOL	PARAMETER	VOLTAGE			Unit
		B	D	M	
V_{DRM} V_{RRM}	Repetitive Peak Off State Voltage	200	400	600	V

HIGH COMMUTATION TRIAC

Electrical Characteristics

SYMBOL	PARAMETER	CONDITIONS	Quadrant		SENSITIVITY			Unit
					11	14	16	
I_{GT} (1)	Gate Trigger Current	$V_D = 12\ V_{DC}$, $R_L = 30\Omega$, $T_j = 25\ °C$	Q1÷Q3	MAX	25	35	50	mA
I_{DRM} /I_{RRM}	Off-State Leakage Current	$V_D = V_{DRM}$, $R_{GK} = 1K\Omega$, $T_j = 125\ °C$		MAX	1			mA
		$V_R = V_{RRM}$, $T_j = 25\ °C$		MAX	5			µA
V_{to} (2)	Threshold Voltage	$T_j = 125\ °C$		MAX	0.85			V
R_d(2)	Dynamic Resistance	$T_j = 125\ °C$		MAX	35			mΩ
V_{TM} (2)	On-state Voltage	$I_T = 17$ Amp, tp = 380 µs, $T_j = 25\ °C$		MAX	1.55			V
V_{GT}	Gate Trigger Voltage	$V_D = 12\ V_{DC}$, $R_L = 30\Omega$, $T_j = 25\ °C$	Q1÷Q3	MAX	1.3			V
V_{GD}	Gate Non Trigger Voltage	$V_D = V_{DRM}$, $R_L = 3.3K\Omega$, $T_j = 125\ °C$	Q1÷Q3	MIN	0.2			V
I_H (2)	Holding Current	$I_T = 100$ mA, Gate open, $T_j = 25\ °C$		MAX	25	35	50	mA
I_L	Latching Current	$I_G = 1.2\ I_{GT}$, $T_j = 25\ °C$	Q1,Q3	MAX	40	50	70	mA
			Q2	MAX	50	60	80	
dv / dt (2)	Critical Rate of Voltage Rise	$V_D = 0.67 \times V_{DRM}$, Gate open $T_j = 125\ °C$		MIN	200	500	1000	V/µs
(dI/dt)c (2)	Critical Rate of Current Rise	(dv/dt)c= 0.1 V/µs $T_j = 125\ °C$		MIN	-	-	-	A/ms
		(dv/dt)c= 10 V/µs $T_j = 125\ °C$		MIN	-	-	-	
		without snubber Tj = 125 °C		MIN	5.3	6.5	12	
$R_{th(j-c)}$	Thermal Resistance Junction-Case	for AC 360° conduction angle			1.4			°C/W
$R_{th(j-a)}$	Thermal Resistance Junction-Ambient				60			°C/W

(1) Minimum I_{GT} is guaranted at 5% of I_{GT} max.

(2) For either polarity of electrode MT2 voltage with reference to electrode MT1.

PART NUMBER INFORMATION

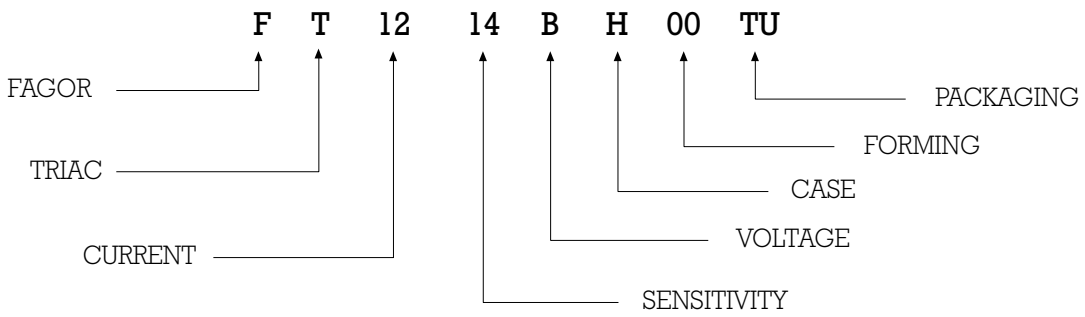

Fig. 1: Maximum power dissipation versus RMS on-state curren (full cycle).

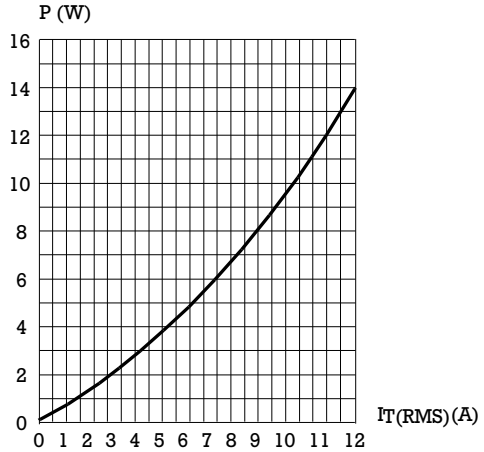

Fig. 2: RMS on-state current versus case temperature (full cycle).

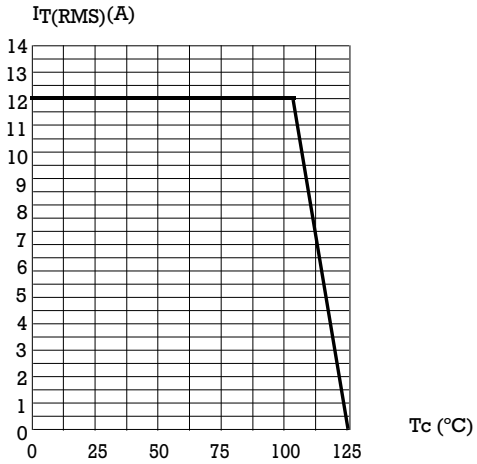

Fig. 3: : Relative variation of thermal impedance versus pulse duration.

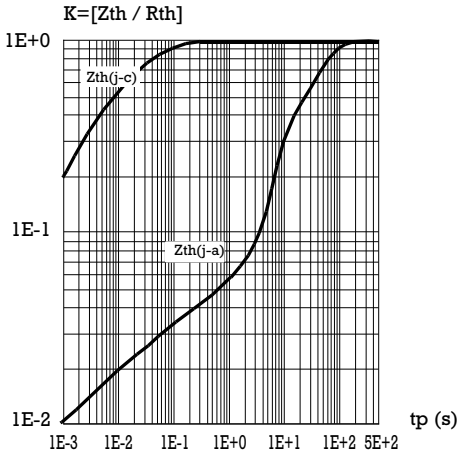

Fig. 4: On-state characteristics (maximum values)

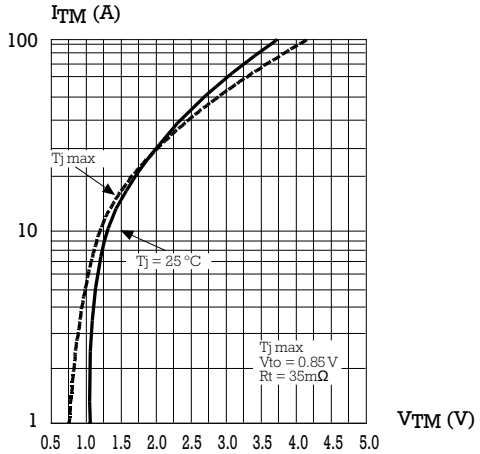

Fig. 5: Surge peak on-state current versus number of cycles

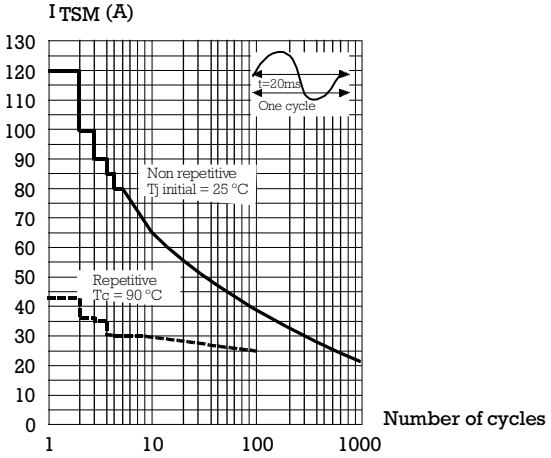

Fig. 6: Non-repetitive surge peak on-state current for a sinusoidal pulse with width tp<10ms, and corresponding value of I^2t.

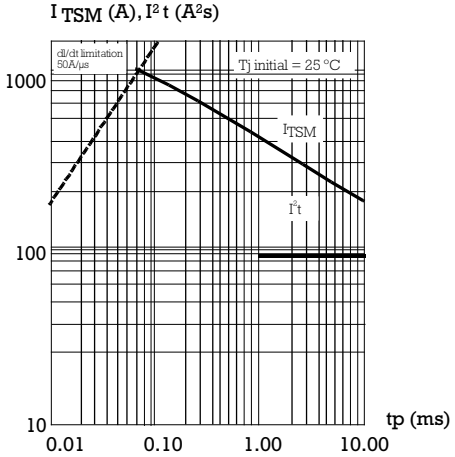

HIGH COMMUTATION TRIAC

Fig. 7: Relative variation of gate trigger current, holding current and latching versus junction temperature (typical values)

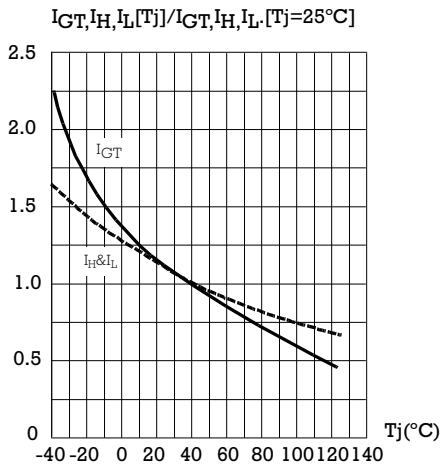

Fig. 8: Relative variation of critical rate of decrease of main current versus junction temperature

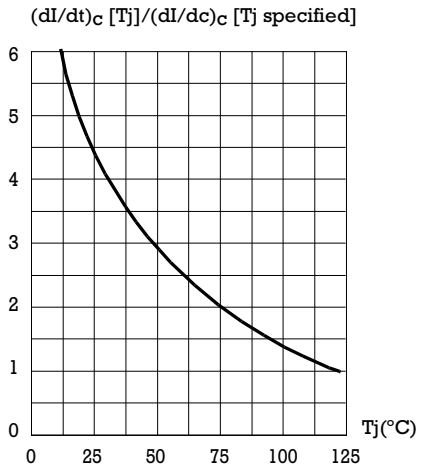

PACKAGE MECHANICAL DATA TO-220AB (Plastic)

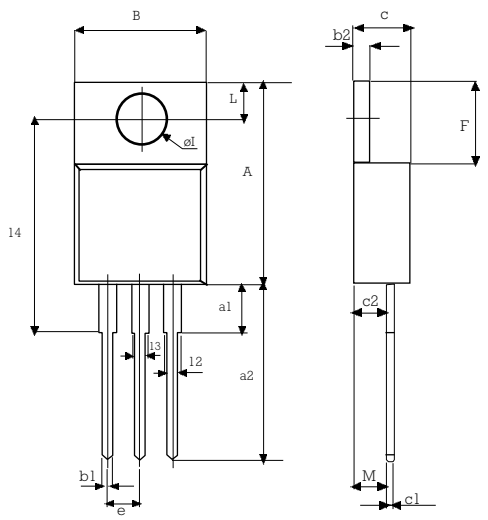

REF.	DIMENSIONS		
	Milimeters		
	Min.	Nominal	Max.
A	15.20		15.90
a1		3.75	
a2	13.00		14.00
B	10.00		10.40
b1	0.61		0.88
b2	1.23		1.32
C	4.40		4.60
c1	0.49		0.70
c2	2.40		2.72
e	2.40		2.70
F	6.20		6.60
I	3.75		3.85
I4	15.80	16.40	16.80
L	2.65		2.95
I2	1.14		1.70
I3	1.14		1.70
M		2.60	