General Description

This planar stripe MOSFET has better characteristics, such as fast switching time, low on resistance, low gate charge and excellent avalanche characteristics. It is mainly suitable for active power factor correction and switching mode power supplies.

FEATURES

- V_{DSS}=650V, I_D=7A
- Drain-Source ON Resistance :
  $R_{DS(ON)}$=1.4 Ω @V_{GS}=10V
- Qg(typ.)= 32nC

MAXIMUM RATING (Tc=25℃)

CHARACTERISTIC		SYMBOL	RATING		UNIT
			KHB7D0N65P1	KHB7D0N65F1 KHB7D0N65F2	
Drain-Source Voltage		V_{DSS}	650		V
Gate-Source Voltage		V_{GSS}	±30		V
Drain Current	@T_C=25℃	I_D	7	7*	A
	@T_C=100℃		4.2	4.2*	
	Pulsed (Note1)	I_{DP}	28	28*	
Single Pulsed Avalanche Energy (Note 2)		E_{AS}	212		mJ
Repetitive Avalanche Energy (Note 1)		E_{AR}	1.6		mJ
Peak Diode Recovery dv/dt (Note 3)		dv/dt	4.5		V/ns
Drain Power Dissipation	Tc=25℃	P_D	160	52	W
	Derate above 25℃		1.28	0.42	W/℃
Maximum Junction Temperature		T_j	150		℃
Storage Temperature Range		T_{stg}	-55～150		℃
Thermal Characteristics					
Thermal Resistance, Junction-to-Case		R_{thJC}	0.78	2.4	℃/W
Thermal Resistance, Case-to-Sink		R_{thCS}	0.5	-	℃/W
Thermal Resistance, Junction-to-Ambient		R_{thJA}	62.5	62.5	℃/W

* : Drain current limited by maximum junction temperature.

PIN CONNECTION

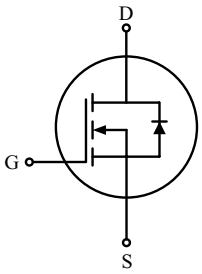

KHB7D0N65P1

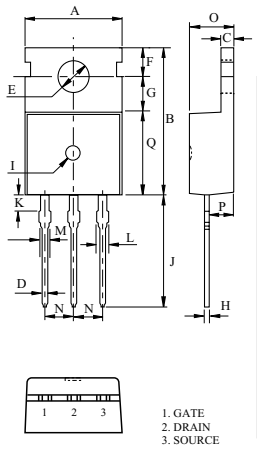

DIM	MILLIMETERS
A	9.9 ± 0.2
B	15.95 MAX
C	1.3+0.1/-0.05
D	0.8 ± 0.1
E	ø3.6 ± 0.2
F	2.8 ± 0.1
G	3.7
H	0.5+0.1/-0.05
I	ø1.5
J	13.08 ± 0.3
K	1.46
L	1.4 ± 0.1
M	1.27 ± 0.1
N	2.54 ± 0.2
O	4.5 ± 0.2
P	2.4 ± 0.2
Q	9.2 ± 0.2

TO-220AB

KHB7D0N65F1

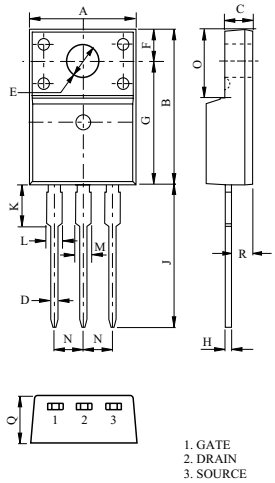

DIM	MILLIMETERS
A	10.16 ± 0.2
B	15.87 ± 0.2
C	2.54 ± 0.2
D	0.8 ± 0.1
E	ø3.18 ± 0.1
F	3.3 ± 0.1
G	12.57 ± 0.2
H	0.5 ± 0.1
J	13.0 MAX
K	3.23 ± 0.1
L	1.47 MAX
M	1.47 MAX
N	2.54 ± 0.2
O	6.68 ± 0.2
Q	4.7 ± 0.2
R	2.76 ± 0.2

TO-220IS (1)

KHB7D0N65F2

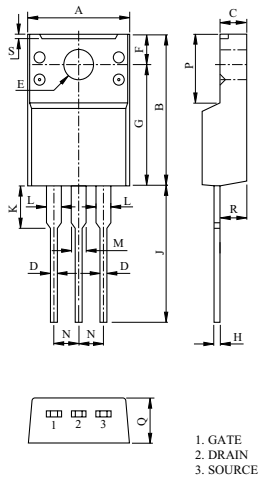

DIM	MILLIMETERS
A	10.0±0.3
B	15.0±0.3
C	2.70±0.3
D	0.76+0.09/-0.05
E	Φ3.2±0.2
F	3.0±0.3
G	12.0±0.3
H	0.5+0.1/-0.05
J	13.6±0.5
K	3.7±0.2
L	1.2+0.25/-0.1
M	1.5+0.25/-0.1
N	2.54±0.1
P	6.8±0.1
Q	4.5±0.2
R	2.6±0.2
S	0.5 Typ

TO-220IS

ELECTRICAL CHARACTERISTICS (Tc=25℃)

CHARACTERISTIC	SYMBOL	TEST CONDITION	MIN.	TYP.	MAX.	UNIT
Static						
Drain-Source Breakdown Voltage	BV_{DSS}	I_D=250μA, V_{GS}=0V	650	-	-	V
Breakdown Voltage Temperature Coefficient	$\Delta BV_{DSS}/\Delta T_j$	I_D=250μA, Referenced to 25℃	-	0.8	-	V/℃
Drain Cut-off Current	I_{DSS}	V_{DS}=650V, V_{GS}=0V,	-	-	±10	μA
Gate Threshold Voltage	V_{th}	V_{DS}=V_{GS}, I_D=250μA	2	-	4	V
Gate Leakage Current	I_{GSS}	V_{GS}=±30V, V_{DS}=0V	-	-	±100	nA
Drain-Source ON Resistance	$R_{DS(ON)}$	V_{GS}=10V, I_D=3.75A	-	1.2	1.4	Ω
Dynamic						
Total Gate Charge	Q_g	V_{DS}=520V, I_D=7.0A V_{GS}=10V (Note4,5)	-	32	40	nC
Gate-Source Charge	Q_{gs}		-	5.4	-	
Gate-Drain Charge	Q_{gd}		-	12.6	-	
Turn-on Delay time	$t_{d(on)}$	V_{DD}=325V R_L=46 Ω R_G=25 Ω (Note4,5)	-	20	45	ns
Turn-on Rise time	t_r		-	40	90	
Turn-off Delay time	$t_{d(off)}$		-	125	260	
Turn-off Fall time	t_f		-	80	170	
Input Capacitance	C_{iss}	V_{DS}=25V, V_{GS}=0V, f=1.0MHz	-	1310	1700	pF
Output Capacitance	C_{oss}		-	113	147	
Reverse Transfer Capacitance	C_{rss}		-	11.4	14.8	
Source-Drain Diode Ratings						
Continuous Source Current	I_S	V_{GS}<V_{th}	-	-	7	A
Pulsed Source Current	I_{SP}		-	-	28	
Diode Forward Voltage	V_{SD}	I_S=7.0A, V_{GS}=0V	-	-	1.5	V
Reverse Recovery Time	t_{rr}	I_S=7.0A, V_{GS}=0V, dIs/dt=100A/μs	-	410	-	ns
Reverse Recovery Charge	Q_{rr}		-	4	-	μC

Note 1) Repetivity rating : Pulse width limited by junction temperature.

Note 2) L =8mH, I_S=7.0A, V_{DD}=50V, R_G=25 Ω, Starting T_j=25℃.

Note 3) $I_S \leq$7.0A, dI/dt ≤200A/μs, $V_{DD} \leq BV_{DSS}$, Starting T_j=25 ℃.

Note 4) Pulse Test : Pulse width ≤ 300μs, Duty Cycle ≤ 2%.

Note 5) Essentially independent of operating temperature.

Fig1. I_D - V_{DS}

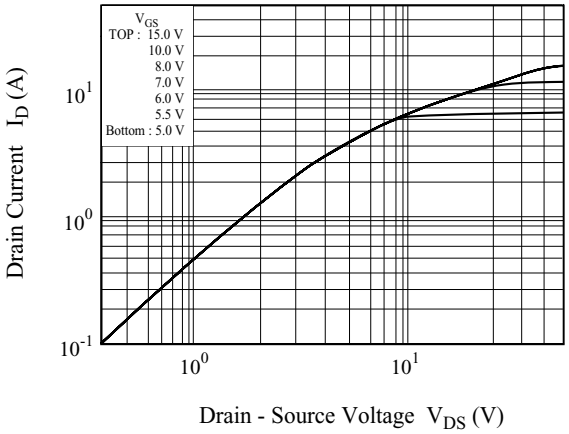

Fig2. I_D - V_{GS}

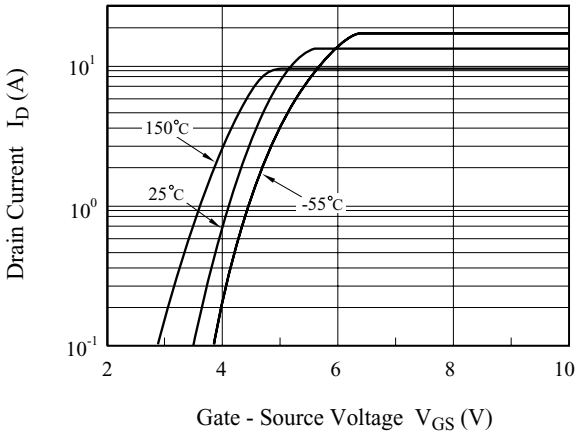

Fig3. BV_{DSS} - T_j

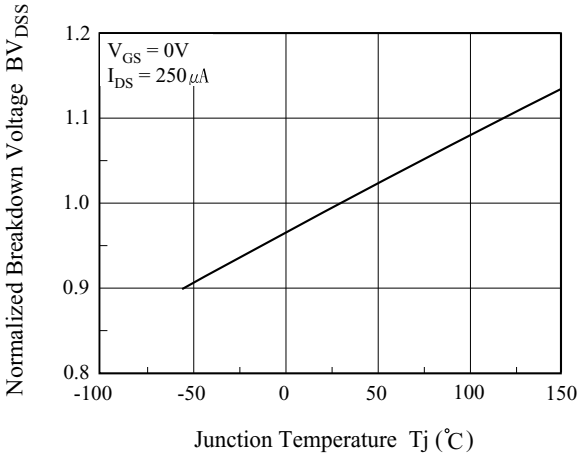

Fig4. $R_{DS(ON)}$ - I_D

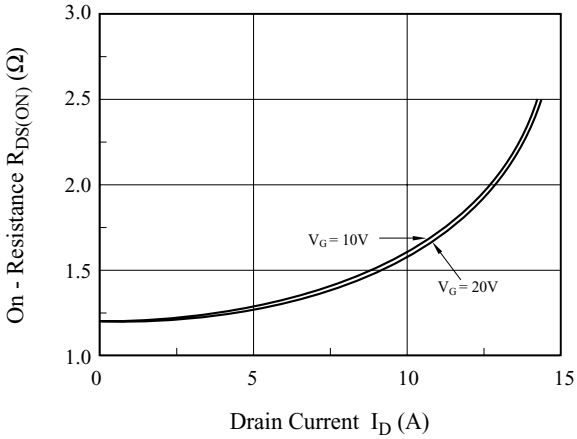

Fig5. I_S - V_{SD}

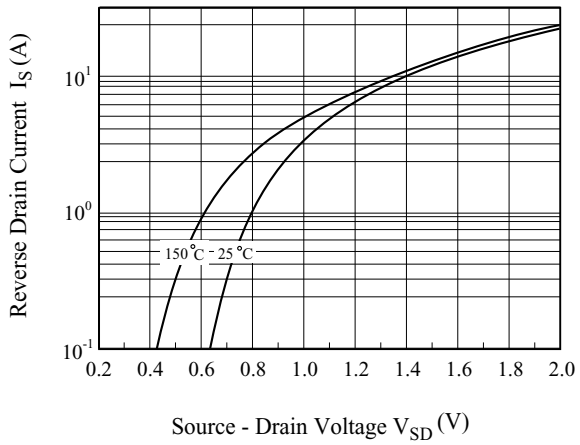

Fig6. $R_{DS(ON)}$ - T_j

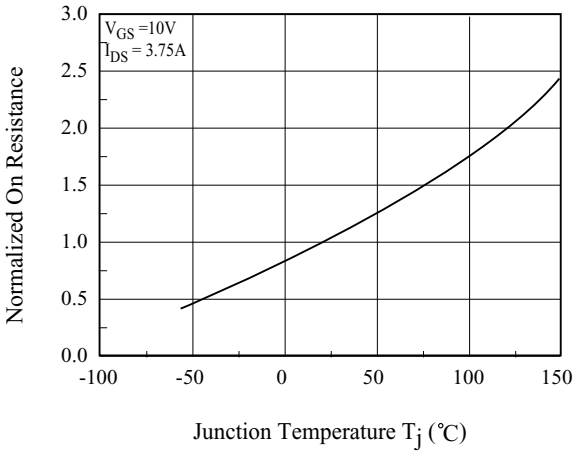

Fig7. C - V_{DS}

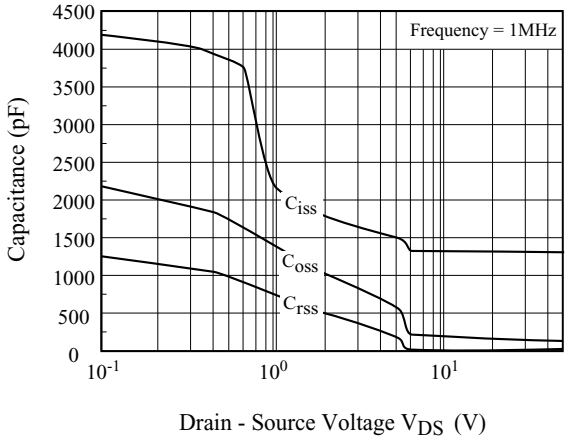

Fig8. Q_g- V_{GS}

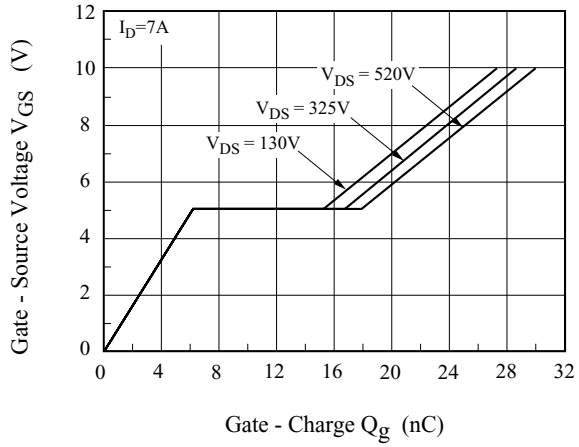

Fig9. Safe Operation Area

(KHB7D0N65P1)

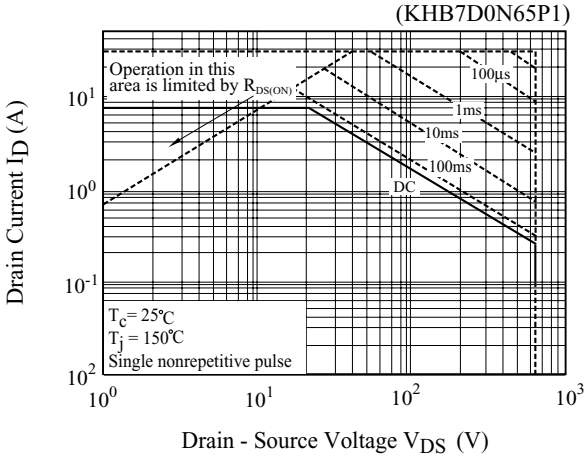

Fig10. Safe Operation Area

(KHB7D0N65F1, KHB7D0N65F2)

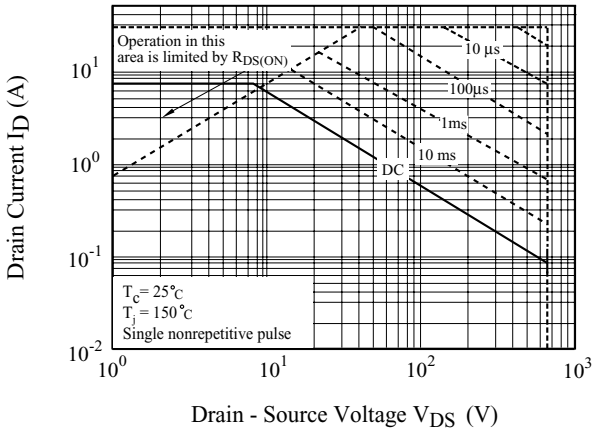

Fig11. I_D - T_j

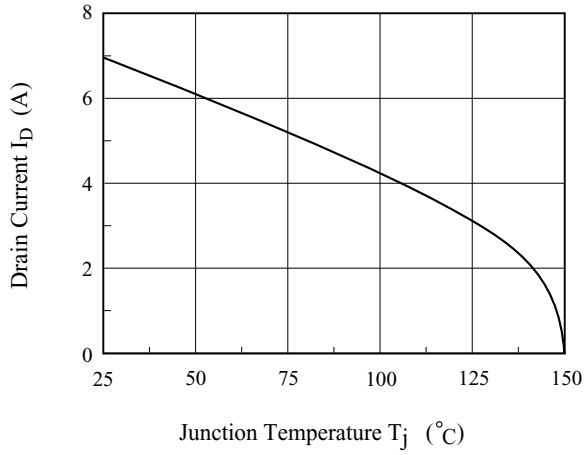

Fig12. Transient Thermal Response Curve

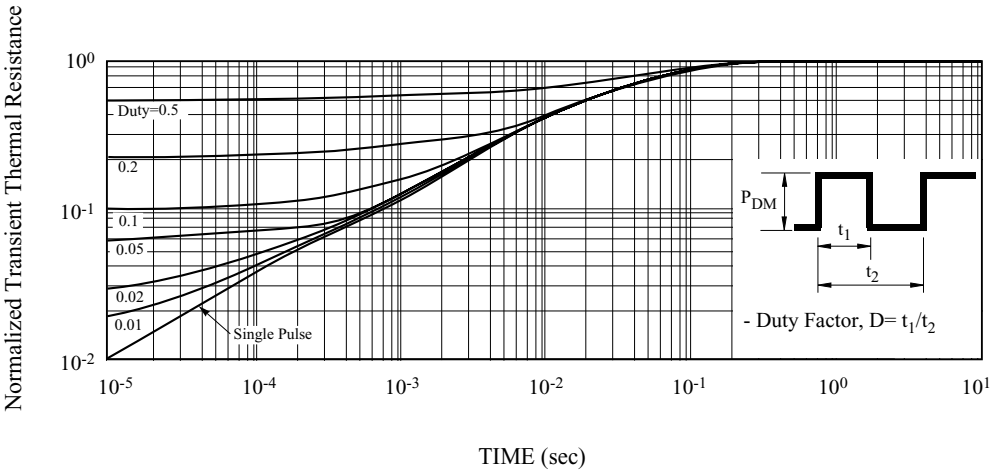

Fig13. Transient Thermal Response Curve

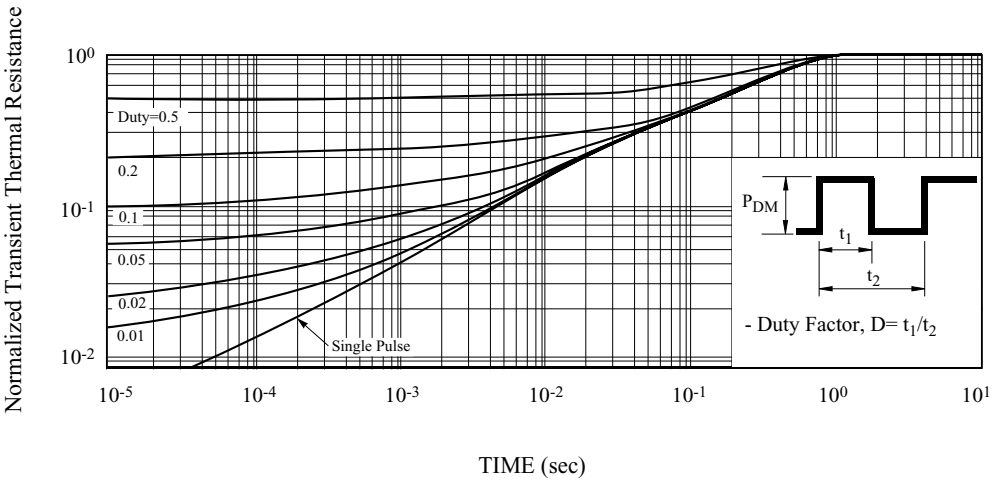

Fig14. Gate Charge

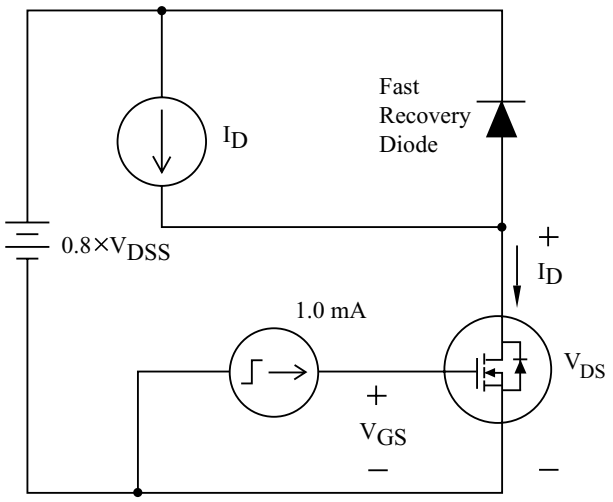

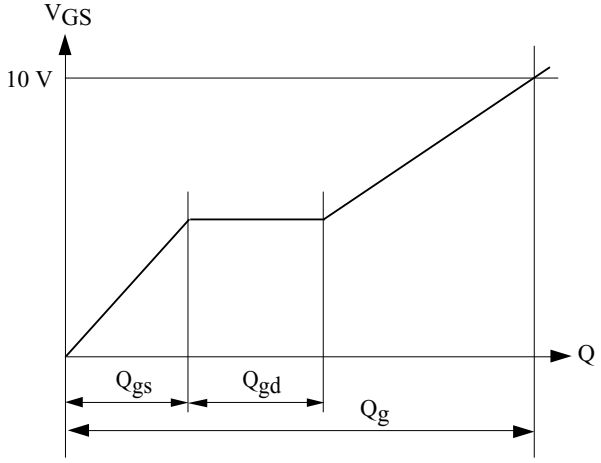

Fig15. Single Pulsed Avalanche Energy

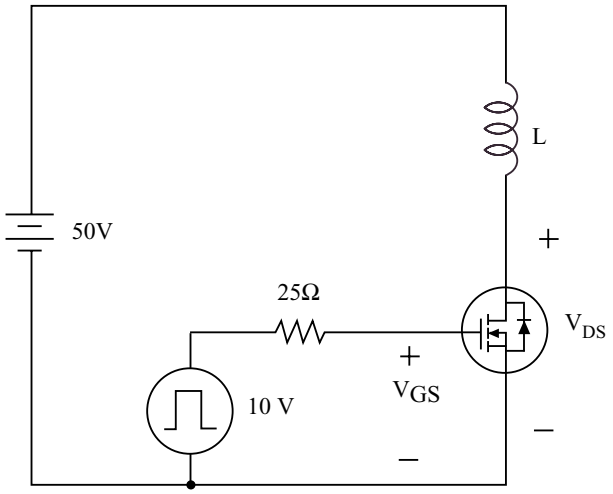

$$E_{AS} = \frac{1}{2} LI_{AS}^2 \frac{BV_{DSS}}{BV_{DSS} - V_{DD}}$$

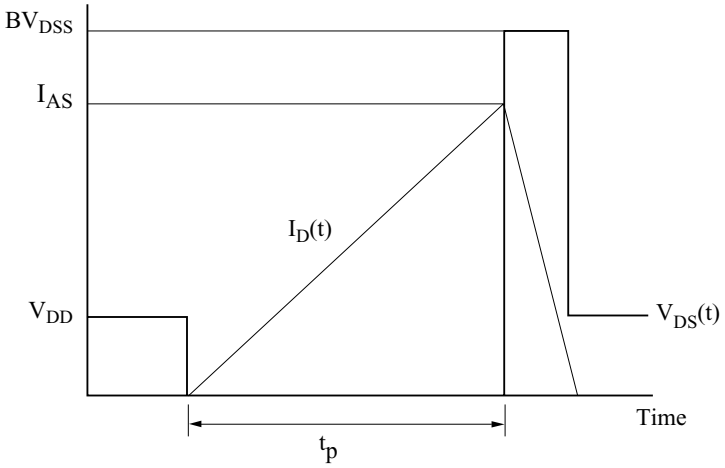

Fig16. Resistive Load Switching

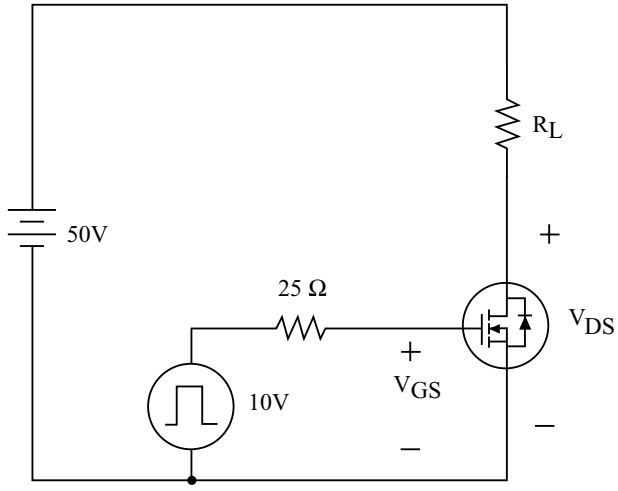

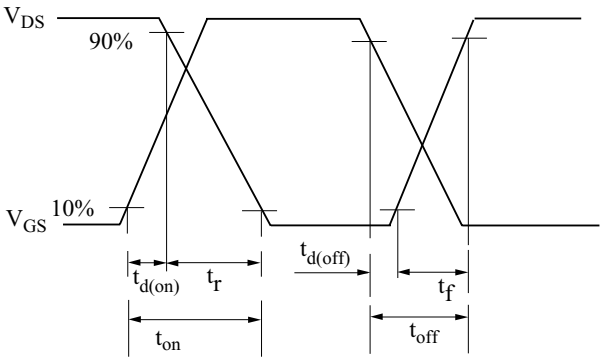

Fig17. Source - Drain Diode Reverse Recovery and dv /dt