Details are subject to change without notice

14+1-Channel Buffer for TFT LCD

Features

- 14-Channels with Output Current: ±30mA (MAX)
- One channel V_{com} with Output Current: ±100mA (MAX)
- Unity Gain Buffer Capable of Driving Large Capacitive Loads
- Input Range Adjusted to Match TFT LCD Requirements
- V_{DD} Specified for 6.5V to 17V
- TQFP-48 Package

General Description

Consisted of 14+1-channel buffers, the AAT7200 is designed to increase the driving capability for the needs of the thin film transistor liquid crystal display (TFT LCD). This device includes a V_{com} buffer circuits, four rail to rail buffer amplifiers circuits, and 10 buffer amplifiers circuits. Each buffer is capable of driving heavy load and offering fast current loading (V_{com} : 100mA, the others: 30mA).

.

Pin Configuration

TOP VIEW

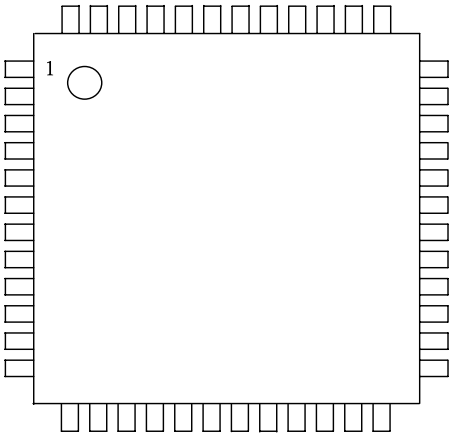

TQFP-48

Pin Description

Pin No.	Name	I/O	Description
1	O13	O	Buffer Channel 13 Output
2	O12	O	Buffer Channel 12 Output
3	O11	O	Buffer Channel 11 Output
4	O10	O	Buffer Channel 10 Output
5	O9	O	Buffer Channel 9 Output
6	O8	O	Buffer Channel 8 Output
7	GND	I	Ground
8	V_{DD}	I	Power Supply
9	O7	O	Buffer Channel 7 Output
10	O6	O	Buffer Channel 6 Output
11	O5	O	Buffer Channel 5 Output
12	O4	O	Buffer Channel 4 Output
13	O3	O	Buffer Channel 3 Output
14	NC	-	-
15	V_{DD}	I	Power Supply
16	NC	-	-
17	NC	-	-
18	O2	O	Buffer Channel 2 Output
19	GND	I	Ground
20	O1	O	Buffer Channel 1 Output
21	GND	I	Ground
22	V_{DD}	I	Power Supply
23	I1	I	Buffer Channel 1 Input
24	I2	I	Buffer Channel 2 Input
25	I3	I	Buffer Channel 3 Input
26	I4	I	Buffer Channel 4 Input
27	I5	I	Buffer Channel 5 Input
28	I6	I	Buffer Channel 6 Input
29	I7	I	Buffer Channel 7 Input
30	V_{DD}	I	Power Supply

Pin Description (Cont.)

Pin No.	Name	I/O	Description
31	GND	I	Ground
32	I8	I	Buffer Channel 8 Input
33	I9	I	Buffer Channel 9 Input
34	I10	I	Buffer Channel 10 Input
35	I11	I	Buffer Channel 11 Input
36	I12	I	Buffer Channel 12 Input
37	I13	I	Buffer Channel 13 Input
38	I14	I	Buffer Channel 14 Input
39	I_{com}	I	Com Buffer Positive Input
40*	NC	-	(For AAT7200 Only)
40*	I_{com-}	-	Com Buffer Negative Input (For AAT7200A Only)
41	NC	-	-
42	NC	-	-
43	V_{DD}	I	Power Supply
44	GND	I	Ground
45	V_{DD}	I	Power Supply
46	GND	I	Ground
47	O_{com}	O	Com Buffer Output
48	O14	O	Buffer Channel 14 Output

Absolute Maximum Ratings

CHARACTERISTICS	SYMBOL	VALUE	UNIT
Supply Voltage	V_{DD}	+18	V
Input Voltage	V_I	-0.5 to $V_{DD}+0.5$	V
Output Voltage	V_O	-0.5 to $V_{DD}+0.5$	V
Output Loading Current for Gamma , Rail-to-Rail Buffer	I_L	± 30	mA
Output Loading Current for Com Buffer		± 100	mA
Maximum Junction Temperature	T_J	+150	°C
Power Dissipation, @ T_C =25 °C	P_D	2.72	W
Power Dissipation, @ T_C =70 °C	P_D	1.74	W
Package Thermal Resistance	θ_{JA}	46	°C /W
Package Thermal Resistance	θ_{JC}	31	°C /W
Operating Temperature	T_C	– 20 to +85	°C
Storage Temperature	$T_{storage}$	– 45 to +125	°C
Lead Temperature (Soldering for10 seconds)	---	260	°C

Note 1: Operating device at values beyond absolute maximum ratings may cause permanent damage.

Electrical Characteristics (V_{DD} =10V, T_C =25°C unless otherwise specified)

Power Supply Performance

Parameter		Test Conditions	Min	Typ	Max	Units
Power Supply Rejection Ratio	PSRR	V_{DD} from 6.5V to 17.0V	-	80	-	dB
Supply Current	I_S		-	9	-	mA

Input Characteristics

Parameter		Test Conditions	Min	Typ	Max	Units
Input Offset Voltage	V_{OS}	$V_I = V_{DD}/2$, $V_O = V_{DD}/2$	-	2	12	mV
Input Bias Current	I_B	$V_I = V_{DD}/2$, $V_O = V_{DD}/2$	-	2	50	nA

AC Characteristics

Parameter		Test Conditions	Min	Typ	Max	Units
Slew Rate	SR	V_I=2V to 8V, 20% to 80%	-	1	-	V/µs
Settling Time	t_s	V_I=4.5V to 5.5V 0.1% V_I=5.5V to 4.5V 0.1%	-	5	-	µs

Electrical Characteristics (V_{DD} =10V, T_C =25°C unless otherwise specified) (Cont.)

Output Characteristics

Parameter		Test Conditions	Min	Typ	Max	Un
Output Swing Low	V_{OL}	I_L =5mA (Buffer 1, 2, 13, 14) V_I=0V	-	0.08	0.15	V
		I_L =10mA (Buffer 3, 4,…, 11, 12) V_I=1V	-	1.02	1.05	
Output Swing High	V_{OH}	I_L =– 5 mA (Buffer 1, 2, 13, 14) V_I=10V	9.85	9.92	-	V
		I_L =– 10 mA (Buffer 3, 4,…, 11, 12) V_I=9V	8.95	8.98	-	
Output Swing (Buffer 3, 4,…, 11, 12)	V_{OL}	I_L =10mA, V_I=5V	-	5.02	5.04	V
	V_{OH}	I_L =– 10 mA V_I=5V	4.96	4.98	-	
Output Swing (COM)	V_{OL}	I_L =50mA V_I=5V	-	5.03	5.05	V
	V_{OH}	I_L =– 50 mA V_I=5V	4.95	4.97	-	
Short Circuit Current	I_{SC}	(Buffer 1~14)	-	± 70	-	mA
		(Com Buffer), I_{com-} short to O_{com} for AAT7200A	-	±180	-	mA

Block Diagram
AAT7200

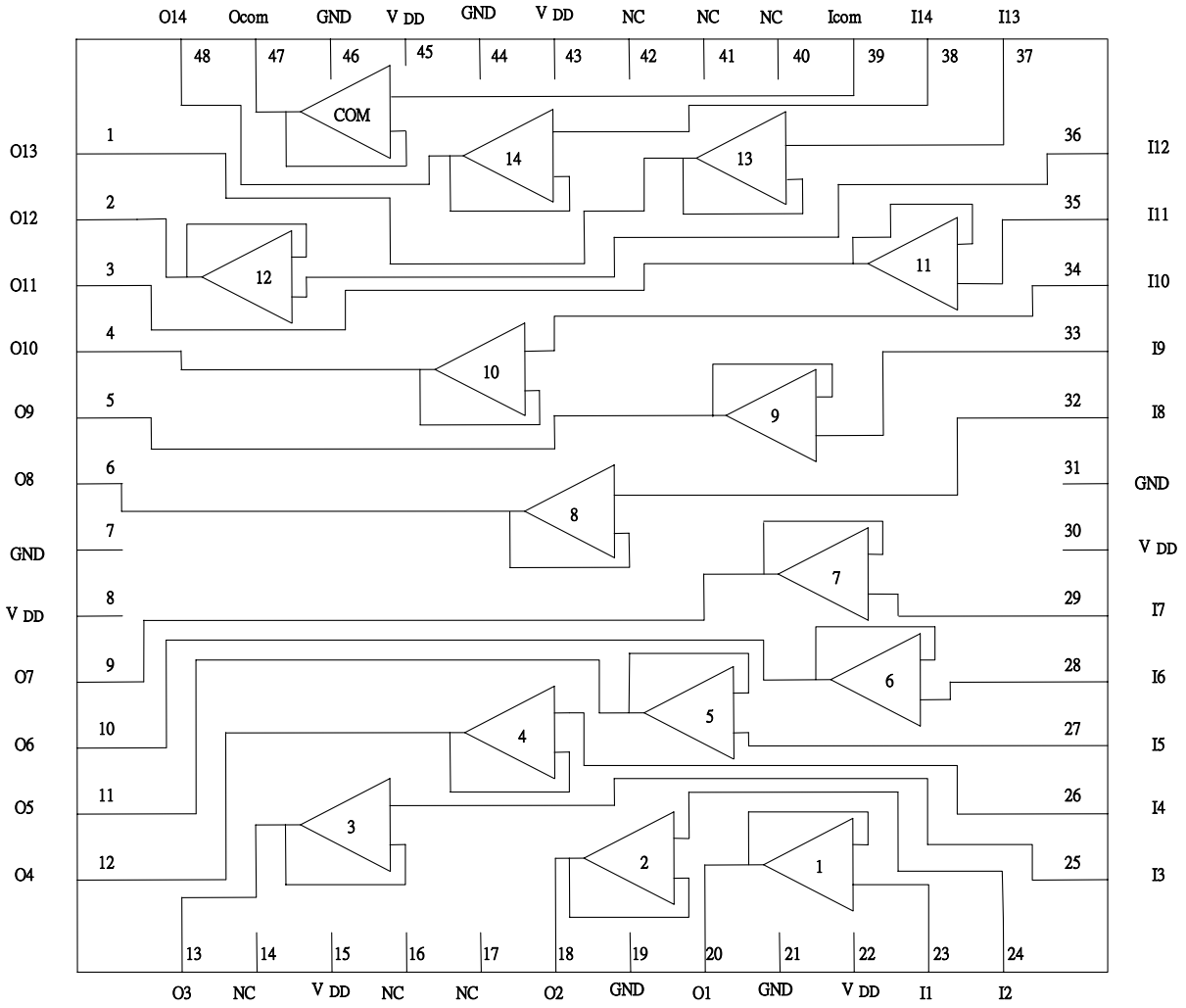

Block Diagram
AAT7200A

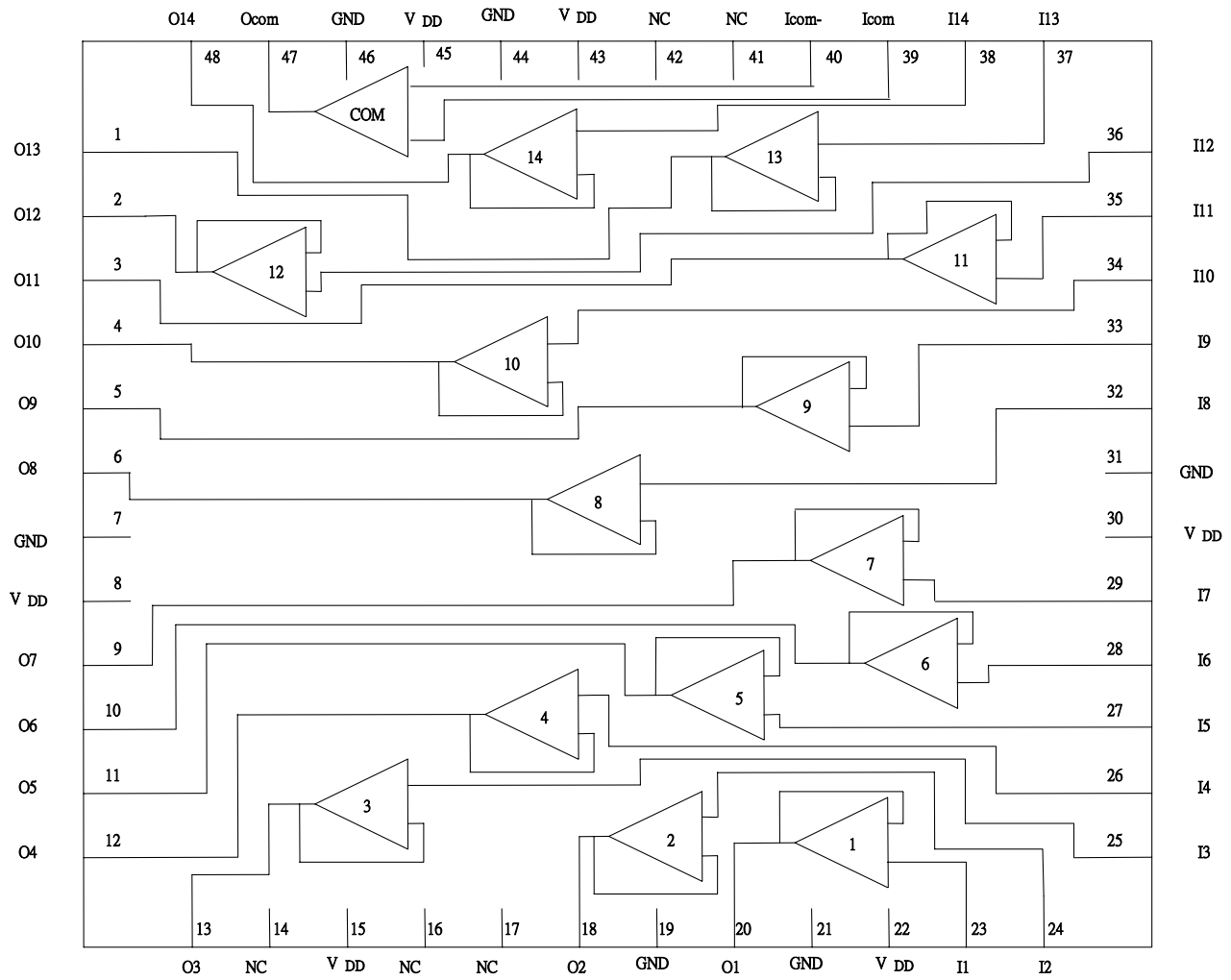

Application Circuit
AAT7200

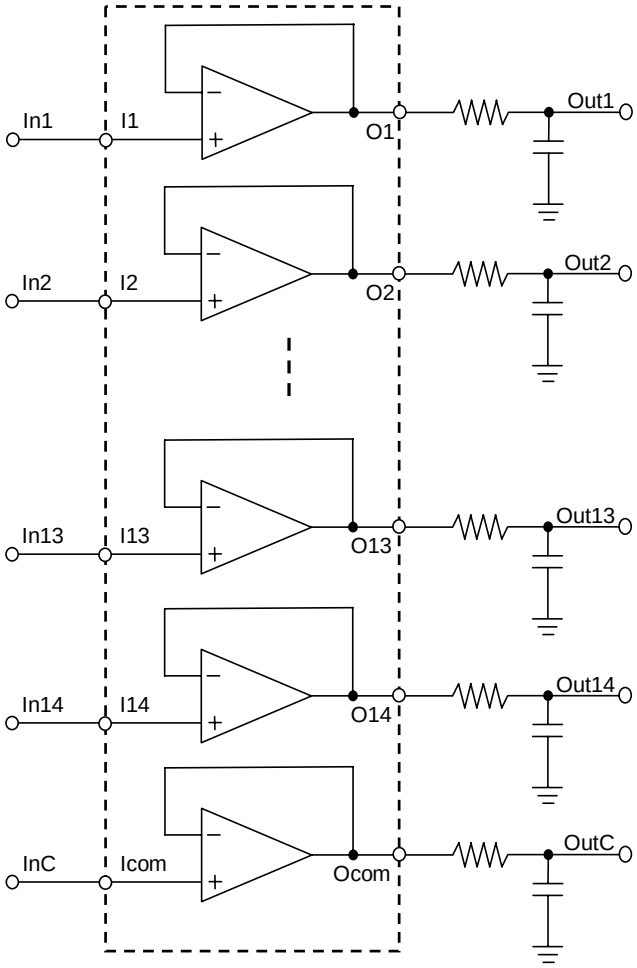

Application Circuit

AAT7200A

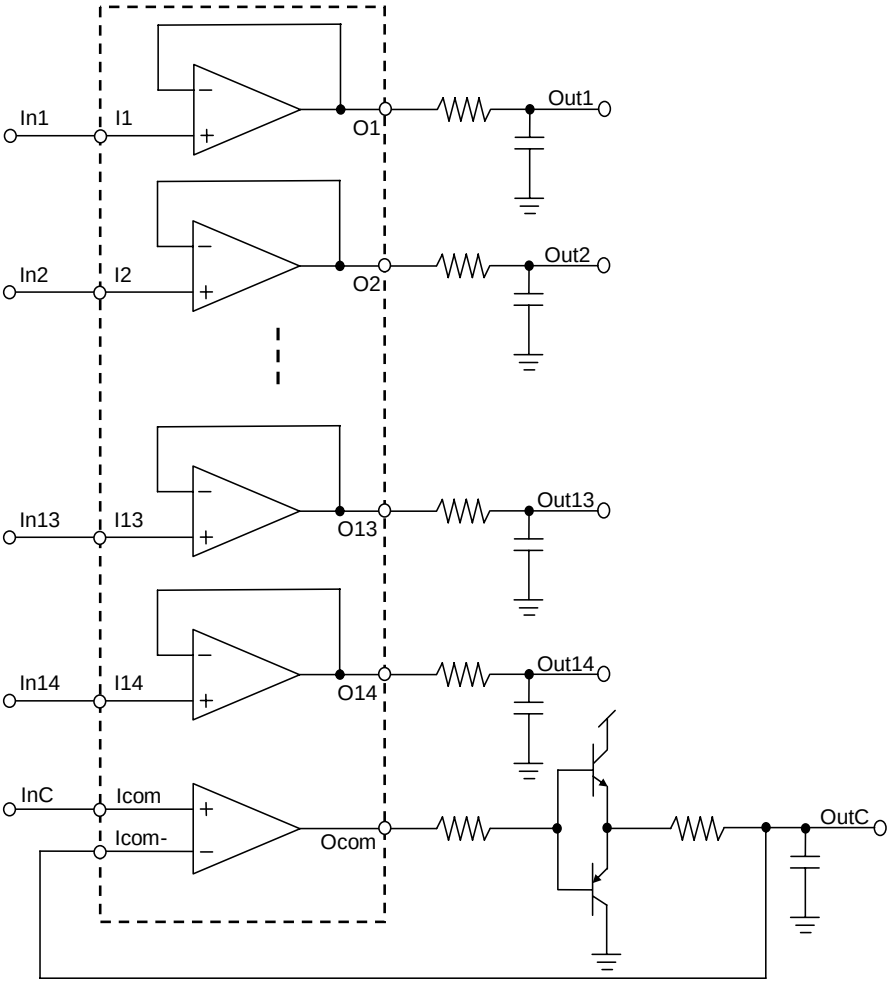

Package Dimension
TQFP48

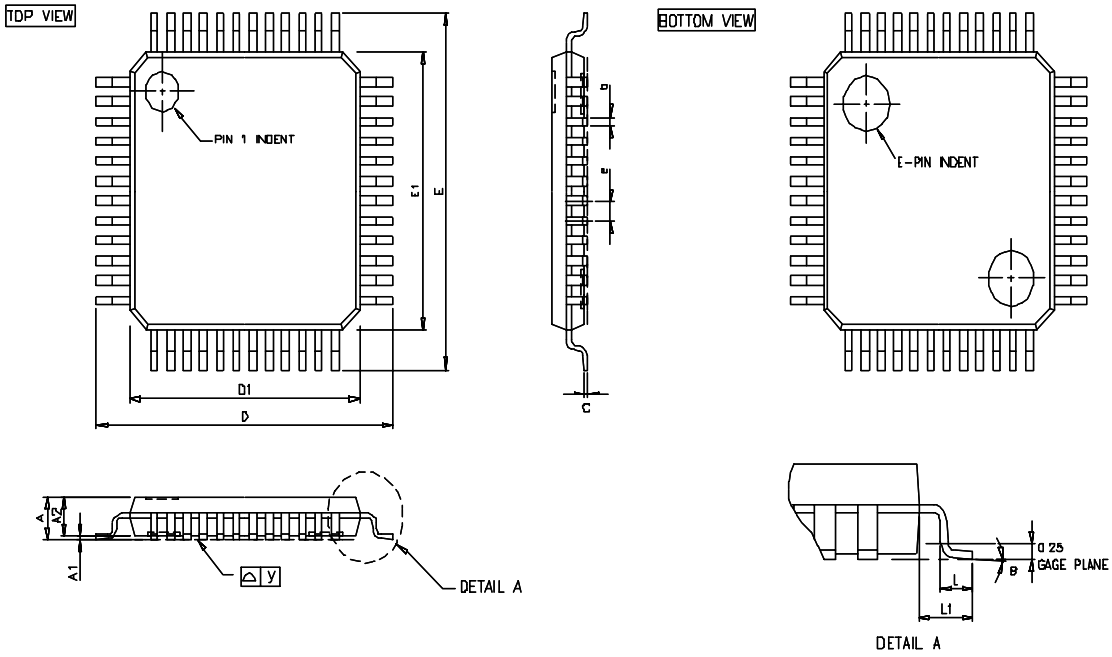

Symbol	Dimensions In Millimeters		
	Min	TYP	Max
A	-----	-----	1.20
A1	0.05	-----	0.15
A2	0.95	1.00	1.05
b	0.17	0.22	0.27
C	0.12	-----	0.20
D	8.70	9.00	9.30
D1	6.80	7.00	7.20
E	8.70	9.00	9.30
E1	6.80	7.00	7.20
e	-----	0.50	-----
L	0.45	0.60	0.75
L1	-----	1.00	-----
θ	0°	3.5°	7°
y	0.00	-----	0.080