RJH30H1DPP-M0

Silicon N Channel IGBT
High speed power switching

R07DS0463EJ0200
Rev.2.00
Jun 15, 2011

Features

- Trench gate and thin wafer technology (G6H-II series)
- High speed switching: tr =80 ns typ., tf = 150 ns typ.
- Low collector to emitter saturation voltage: $V_{CE(sat)}$= 1.5 V typ.
- Low leak current: I_{CES} = 1 μA max.
- Built-in Fast Recovery Diode: V_F = 1.4 V typ., t_{rr} = 23 ns typ.
- Isolated package: TO-220FL

Outline

RENESAS Package code: PRSS0003AF-A
(Package name: TO-220FL)

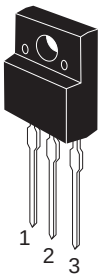

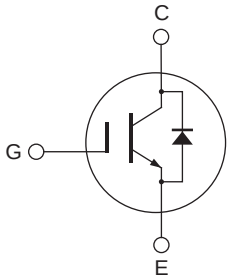

1. Gate
2. Collector
3. Emitter

Absolute Maximum Ratings

(Tc = 25°C)

Item	Symbol	Ratings	Unit
Collector to emitter voltage	V_{CES}	360	V
Gate to emitter voltage	V_{GES}	±30	V
Collector current	I_C	30	A
Collector peak current	ic(peak) Note1	200	A
Collector to emitter diode Forward peak current	i_{DF}(peak) Note1	100	A
Collector dissipation	P_C Note2	20	W
Junction to case thermal impedance	θj-c	6.25	°C/W
Junction temperature	Tj	150	°C
Storage temperature	Tstg	–55 to +150	°C

Notes: 1. PW ≤ 10 μs, duty cycle ≤ 1%
2. Tc = 25°C

Electrical Characteristics

(Tj = 25°C)

Item	Symbol	Min	Typ	Max	Unit	Test Conditions
Zero gate voltage collector current	I_{CES}	—	—	1	μA	V_{CE} = 360 V, V_{GE} = 0
Gate to emitter leak current	I_{GES}	—	—	±100	nA	V_{GE} = ± 30 V, V_{CE} = 0
Gate to emitter cutoff voltage	$V_{GE(off)}$	2.5	—	5	V	V_{CE} = 10 V, I_C = 1 mA
Collector to emitter saturation voltage	$V_{CE(sat)}$	—	1.5	2	V	I_C = 30A, V_{GE} = 15 V Note3
Input capacitance	Cies	—	740	—	pF	V_{CE} = 25 V V_{GE} = 0 f = 1 MHz
Output capacitance	Coes	—	60	—	pF	
Reveres transfer capacitance	Cres	—	17	—	pF	
Total gate charge	Qg	—	23	—	nC	V_{GE} = 15 V V_{CE} = 150 V I_C = 30 A
Gate to emitter charge	Qge	—	4	—	nC	
Gate to collector charge	Qgc	—	8	—	nC	
Switching time	$t_{d(on)}$	—	0.02	—	μs	I_C = 30 A R_L = 5 Ω V_{GE} = 15 V R_G = 5 Ω
	t_r	—	0.08	—	μs	
	$t_{d(off)}$	—	0.04	—	μs	
	t_f	—	0.15	—	μs	

FRD Forward voltage	V_F	—	1.4	1.7	V	I_F = 20 A Note3
FRD Reverse recovery time	t_{rr}	—	23	—	ns	I_F = 20 A di_F/dt = 100 A/μs

Notes: 3. Pulse test

Main Characteristics

Maximum Safe Operation Area

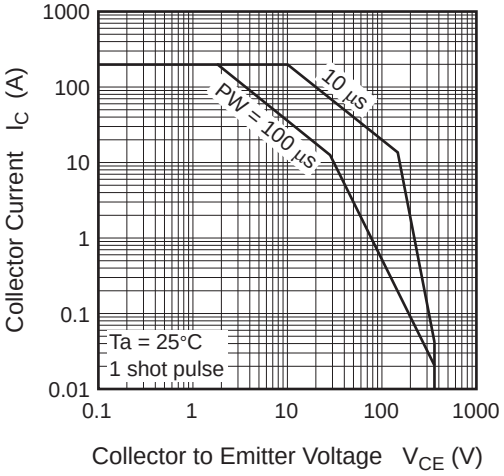

Typical Output Characteristics (1)

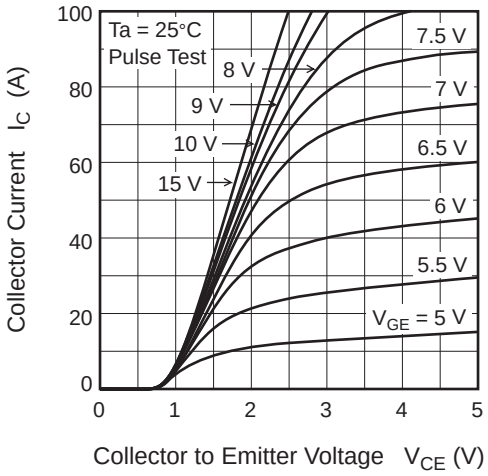

Typical Output Characteristics (2)

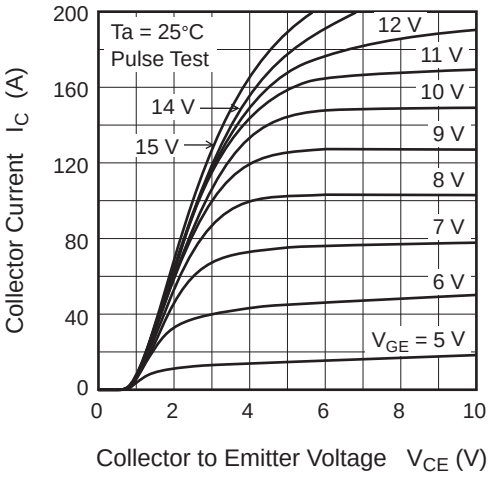

Typical Transfer Characteristics

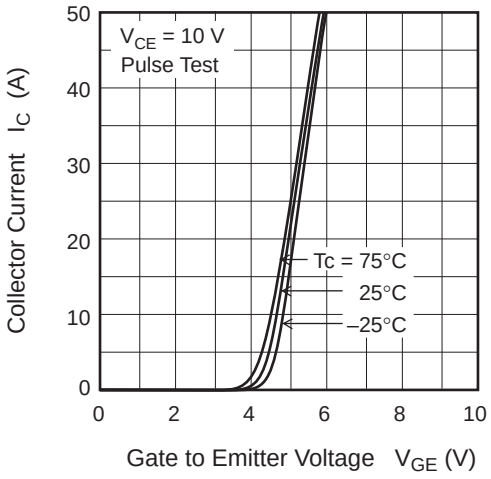

Collector to Emitter Saturation Voltage vs. Gate to Emitter Voltage (Typical)

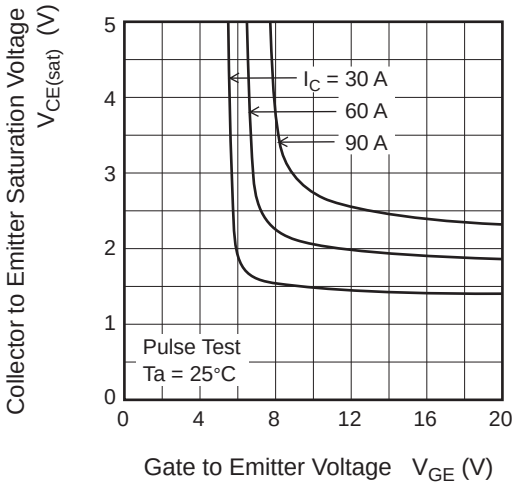

Collector to Emitter Saturation Voltage vs. Collector Current (Typical)

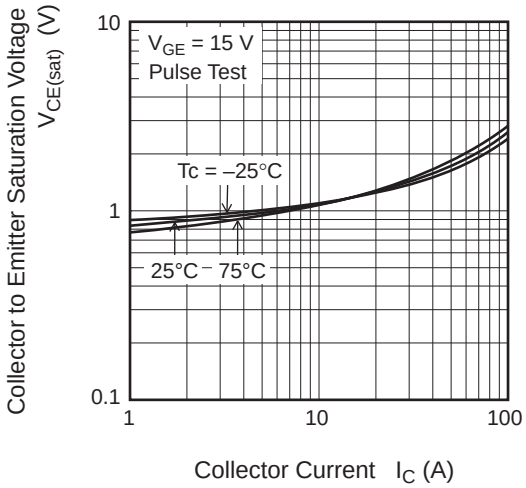

Typical Capacitance vs.
Collector to Emitter Voltage

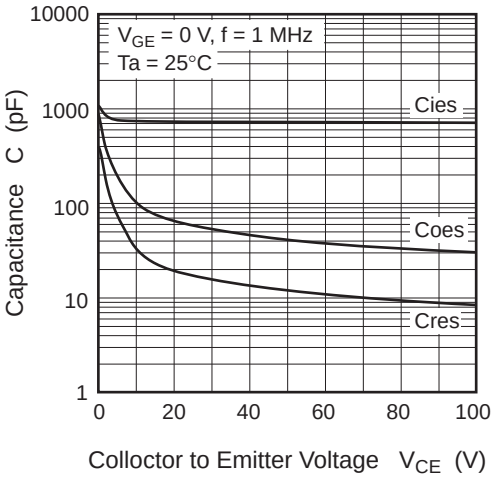

Dynamic Input Characteristics (Typical)

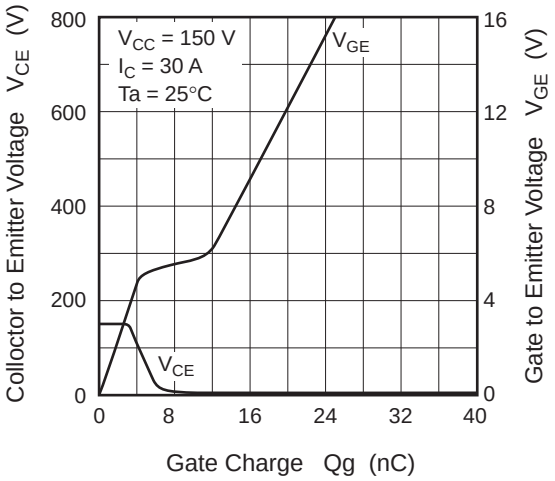

Switching Characteristics (Typical) (1)

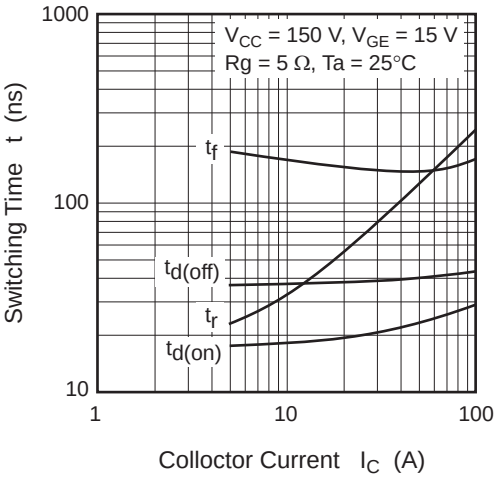

Switching Characteristics (Typical) (2)

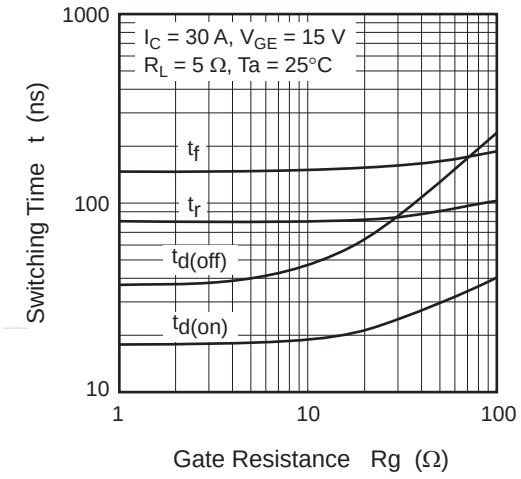

Switching Characteristics (Typical) (3)

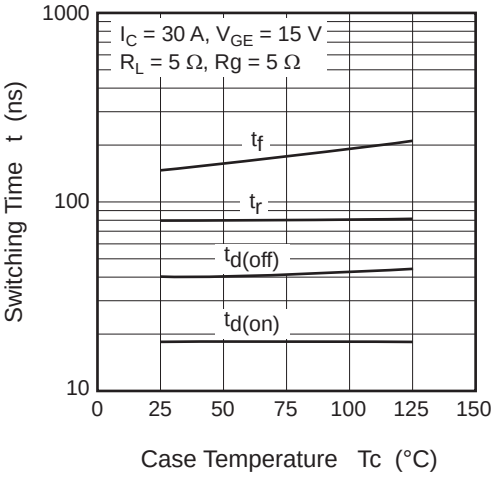

Collector to Emitter Diode Forward Voltage vs. Diode Forward Current

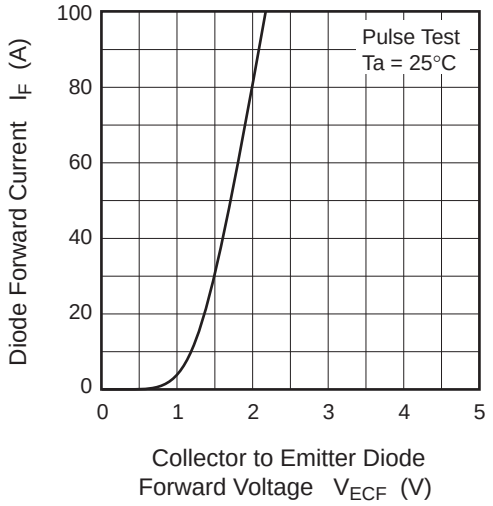

Normalized Transient Thermal Impedance vs. Pulse Width

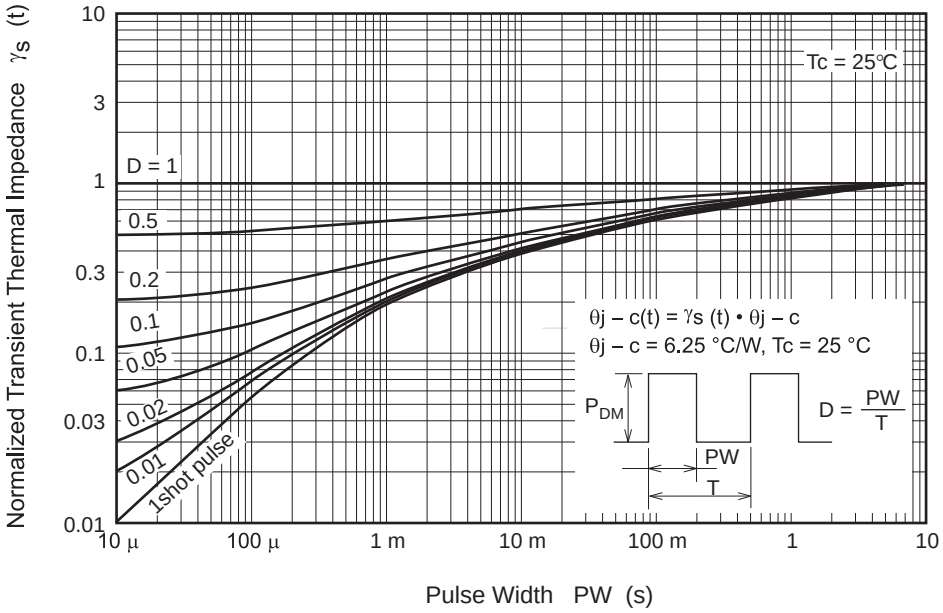

Switching Time Test Circuit

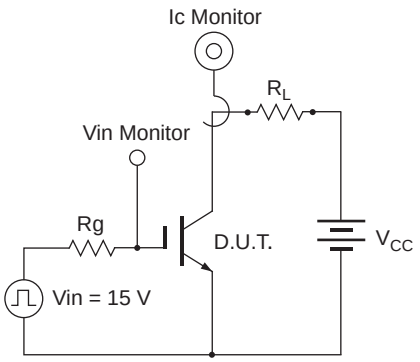

Waveform

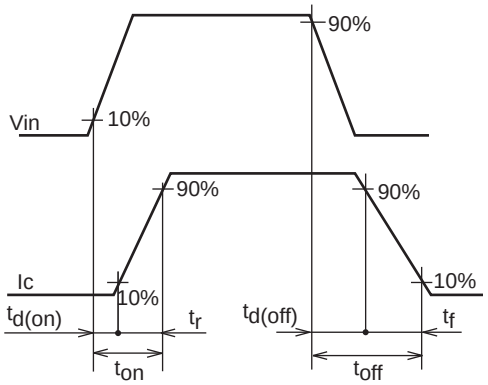

Package Dimensions

Package Name	JEITA Package Code	RENESAS Code	Previous Code	MASS[Typ.]
TO-220FL	—	PRSS0003AF-A	TO-220FL	1.5g

Unit: mm

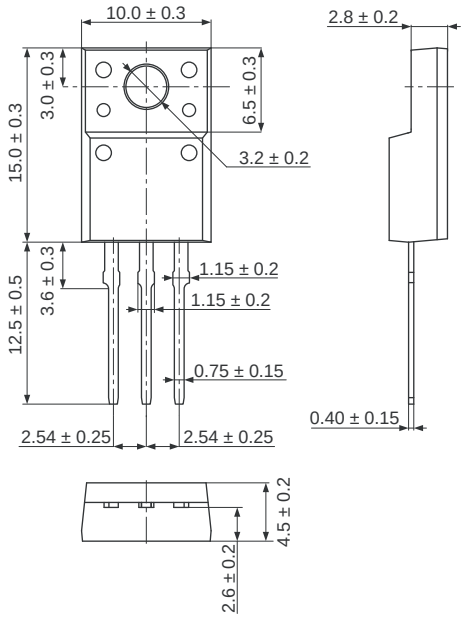

Ordering Information

Orderable Part Number	Quantity	Shipping Container
RJH30H1DPP-M0-T2	600 pcs	Box (Tube)

Notice

1. All information included in this document is current as of the date this document is issued. Such information, however, is subject to change without any prior notice. Before purchasing or using any Renesas Electronics products listed herein, please confirm the latest product information with a Renesas Electronics sales office. Also, please pay regular and careful attention to additional and different information to be disclosed by Renesas Electronics such as that disclosed through our website.
2. Renesas Electronics does not assume any liability for infringement of patents, copyrights, or other intellectual property rights of third parties by or arising from the use of Renesas Electronics products or technical information described in this document. No license, express, implied or otherwise, is granted hereby under any patents, copyrights or other intellectual property rights of Renesas Electronics or others.
3. You should not alter, modify, copy, or otherwise misappropriate any Renesas Electronics product, whether in whole or in part.
4. Descriptions of circuits, software and other related information in this document are provided only to illustrate the operation of semiconductor products and application examples. You are fully responsible for the incorporation of these circuits, software, and information in the design of your equipment. Renesas Electronics assumes no responsibility for any losses incurred by you or third parties arising from the use of these circuits, software, or information.
5. When exporting the products or technology described in this document, you should comply with the applicable export control laws and regulations and follow the procedures required by such laws and regulations. You should not use Renesas Electronics products or the technology described in this document for any purpose relating to military applications or use by the military, including but not limited to the development of weapons of mass destruction. Renesas Electronics products and technology may not be used for or incorporated into any products or systems whose manufacture, use, or sale is prohibited under any applicable domestic or foreign laws or regulations.
6. Renesas Electronics has used reasonable care in preparing the information included in this document, but Renesas Electronics does not warrant that such information is error free. Renesas Electronics assumes no liability whatsoever for any damages incurred by you resulting from errors in or omissions from the information included herein.
7. Renesas Electronics products are classified according to the following three quality grades: "Standard", "High Quality", and "Specific". The recommended applications for each Renesas Electronics product depends on the product's quality grade, as indicated below. You must check the quality grade of each Renesas Electronics product before using it in a particular application. You may not use any Renesas Electronics product for any application categorized as "Specific" without the prior written consent of Renesas Electronics. Further, you may not use any Renesas Electronics product for any application for which it is not intended without the prior written consent of Renesas Electronics. Renesas Electronics shall not be in any way liable for any damages or losses incurred by you or third parties arising from the use of any Renesas Electronics product for an application categorized as "Specific" or for which the product is not intended where you have failed to obtain the prior written consent of Renesas Electronics. The quality grade of each Renesas Electronics product is "Standard" unless otherwise expressly specified in a Renesas Electronics data sheets or data books, etc.
   "Standard": Computers; office equipment; communications equipment; test and measurement equipment; audio and visual equipment; home electronic appliances; machine tools; personal electronic equipment; and industrial robots.
   "High Quality": Transportation equipment (automobiles, trains, ships, etc.); traffic control systems; anti-disaster systems; anti-crime systems; safety equipment; and medical equipment not specifically designed for life support.
   "Specific": Aircraft; aerospace equipment; submersible repeaters; nuclear reactor control systems; medical equipment or systems for life support (e.g. artificial life support devices or systems), surgical implantations, or healthcare intervention (e.g. excision, etc.), and any other applications or purposes that pose a direct threat to human life.
8. You should use the Renesas Electronics products described in this document within the range specified by Renesas Electronics, especially with respect to the maximum rating, operating supply voltage range, movement power voltage range, heat radiation characteristics, installation and other product characteristics. Renesas Electronics shall have no liability for malfunctions or damages arising out of the use of Renesas Electronics products beyond such specified ranges.
9. Although Renesas Electronics endeavors to improve the quality and reliability of its products, semiconductor products have specific characteristics such as the occurrence of failure at a certain rate and malfunctions under certain use conditions. Further, Renesas Electronics products are not subject to radiation resistance design. Please be sure to implement safety measures to guard them against the possibility of physical injury, and injury or damage caused by fire in the event of the failure of a Renesas Electronics product, such as safety design for hardware and software including but not limited to redundancy, fire control and malfunction prevention, appropriate treatment for aging degradation or any other appropriate measures. Because the evaluation of microcomputer software alone is very difficult, please evaluate the safety of the final products or system manufactured by you.
10. Please contact a Renesas Electronics sales office for details as to environmental matters such as the environmental compatibility of each Renesas Electronics product. Please use Renesas Electronics products in compliance with all applicable laws and regulations that regulate the inclusion or use of controlled substances, including without limitation, the EU RoHS Directive. Renesas Electronics assumes no liability for damages or losses occurring as a result of your noncompliance with applicable laws and regulations.
11. This document may not be reproduced or duplicated, in any form, in whole or in part, without prior written consent of Renesas Electronics.
12. Please contact a Renesas Electronics sales office if you have any questions regarding the information contained in this document or Renesas Electronics products, or if you have any other inquiries.

(Note 1) "Renesas Electronics" as used in this document means Renesas Electronics Corporation and also includes its majority-owned subsidiaries.

(Note 2) "Renesas Electronics product(s)" means any product developed or manufactured by or for Renesas Electronics.

SALES OFFICES Renesas Electronics Corporation http://www.renesas.com

Refer to "http://www.renesas.com/" for the latest and detailed information.

Renesas Electronics America Inc.
2880 Scott Boulevard Santa Clara, CA 95050-2554, U.S.A.
Tel: +1-408-588-6000, Fax: +1-408-588-6130

Renesas Electronics Canada Limited
1101 Nicholson Road, Newmarket, Ontario L3Y 9C3, Canada
Tel: +1-905-898-5441, Fax: +1-905-898-3220

Renesas Electronics Europe Limited
Dukes Meadow, Millboard Road, Bourne End, Buckinghamshire, SL8 5FH, U.K
Tel: +44-1628-585-100, Fax: +44-1628-585-900

Renesas Electronics Europe GmbH
Arcadiastrasse 10, 40472 Düsseldorf, Germany
Tel: +49-211-65030, Fax: +49-211-6503-1327

Renesas Electronics (China) Co., Ltd.
7th Floor, Quantum Plaza, No.27 ZhiChunLu Haidian District, Beijing 100083, P.R.China
Tel: +86-10-8235-1155, Fax: +86-10-8235-7679

Renesas Electronics (Shanghai) Co., Ltd.
Unit 204, 205, AZIA Center, No.1233 Lujiazui Ring Rd., Pudong District, Shanghai 200120, China
Tel: +86-21-5877-1818, Fax: +86-21-6887-7858 / -7898

Renesas Electronics Hong Kong Limited
Unit 1601-1613, 16/F., Tower 2, Grand Century Place, 193 Prince Edward Road West, Mongkok, Kowloon, Hong Kong
Tel: +852-2886-9318, Fax: +852 2886-9022/9044

Renesas Electronics Taiwan Co., Ltd.
13F, No. 363, Fu Shing North Road, Taipei, Taiwan
Tel: +886-2-8175-9600, Fax: +886 2-8175-9670

Renesas Electronics Singapore Pte. Ltd.
1 harbourFront Avenue, #06-10, keppel Bay Tower, Singapore 098632
Tel: +65-6213-0200, Fax: +65-6278-8001

Renesas Electronics Malaysia Sdn.Bhd.
Unit 906, Block B, Menara Amcorp, Amcorp Trade Centre, No. 18, Jln Persiaran Barat, 46050 Petaling Jaya, Selangor Darul Ehsan, Malaysia
Tel: +60-3-7955-9390, Fax: +60-3-7955-9510

Renesas Electronics Korea Co., Ltd.
11F., Samik Lavied' or Bldg., 720-2 Yeoksam-Dong, Kangnam-Ku, Seoul 135-080, Korea
Tel: +82-2-558-3737, Fax: +82-2-558-5141

Colophon 1.1